ELLIOTT
EQUIPMENT COMPANY

HiReach
110 to 215 Feet

HiReach™ H110R

TECHNICAL SPECIFICATIONS

H110R SIDE VIEW DIAGRAM

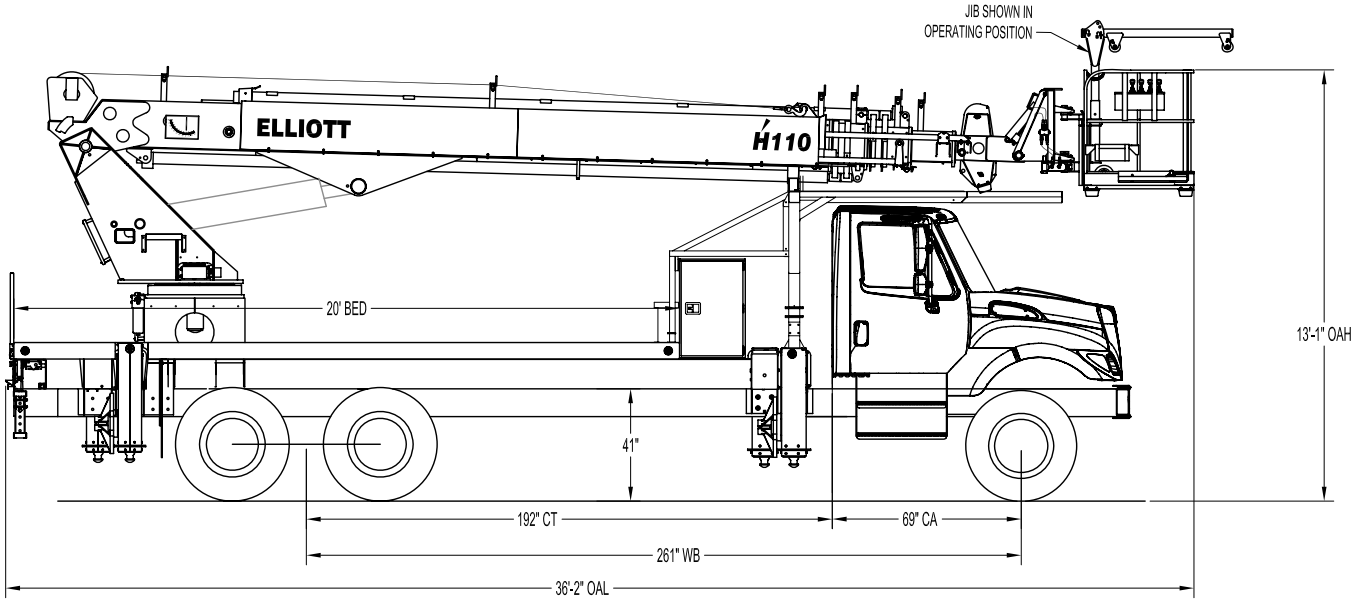

• **Working Height**	115' / 35,1 m
• **Working Side Reach**	86' / 26,2 m
• **Platform Capacity**	500 lbs / 227 kg
• **Platform Size**	40 x 60 in / 102 x 152 cm
• **Platform Type**	EZR
• **Lifting Capacity (Main Winch)**	14,000 lbs / 6350 kg
• **Jib Winch**	500 lbs / 227 kg

• **Powered Boom Sections**	5
• **Overall Height**	13'1" / 4 m
• **Unit Weight (Bare)**	27,500 lbs / 12 474 kg
• **Outrigger Spread Main**	22' / 6,7m
• **Outrigger Spread Auxiliary**	18' / 5,5m
• **Front Gross Axle Weight Rating**	16,000 lbs / 7257 kg
• **Rear Gross Axle Weight Rating**	40,000 lbs / 18 144 kg

ELLIOTT EQUIPMENT COMPANY

Elliott Equipment Company
3514 South 25th Street
Omaha, NE 68105

Phone: 402-592-4500
Fax: 402-592-4553
Email: sales@elliottequip.com

Built for You.
www.elliottequip.com

TECHNICAL SPECIFICATIONS

Maximum Platform Height: 110' ground to platform floor.

Working Range: 115' max. height and 86' max. side reach.

Work Platform: 40x60" EZR removable work platform with 40" high rails. Equipped with two safety lanyard attachment loops and two safety harnesses and 72" lanyards. Platform capacity 500 lbs.

Platform Leveling System: Hydraulic "closed" system consisting of twin platform cylinders interacting with a boom-actuated master cylinder mounted in boom support turret. System provided with factory-set relief valves to compensate for oil expansion or overload during platform leveling operation. Remote releveling controls provided in platform and at ground controls to give precise releveling capability.

Platform Controls: Three individual proportional electronic controllers meter pilot-operated, pressure-compensated modulating valves. Remote controls for boom operations from platform operate from a removable remote control box. Hi/Lo range, start/stop and engine speed toggle controls are also located at platform. Electric remote control cable extends through the electrical slip ring to cable carrier on side of boom to extending boom sections.

Lower Controls: Mounted on streetside of turret.

Outrigger Controls: Parallel open-center stack valve for lever-operated control of right and left outriggers. The outrigger valves are mounted at the rear, under each corner of the bed with roadside valve controlling roadside outriggers and curbside valve controlling curbside outriggers.

Outriggers: "H3" type out-and-down main outriggers with 22' spread. "MH" type out-and-down auxiliary outriggers with 18' spread.

Frame: One piece, all welded, box-type fabrication.

Turret: Reverse offset turret is one-piece weldment mounted on turret box. Turret rotates on large diameter ball bearing.

Rotation: Continuous turret rotation with no stops. Hydraulic motor drives turret through self-locking gear box.

Boom: Steel rectangular tube sections. Assembly includes heavy-duty cylinder fittings, pivot pins, and replaceable wear pads.

Boom Extension: One "piggyback" internal cylinder and two extension cylinders extend the outer boom sections.

Lift: One single-acting full displacement, long stroke cylinder, provides smooth and stable boom elevation. Holding valve prevents boom from falling in event of hose failure.

Cylinders: All cylinders use microhoned cylinder tubing, chrome shafts, top grade packing and protective rod wipers. Cylinder-mounted holding valves provided on all load-holding cylinders.

Hoses: All high pressure hoses are wire braid reinforced with a minimum safety factor of 4 to 1.

Oil Tank Capacity: 70 gallon mounted to truck frame on roadside.

Hydraulic System: Operating pressure is 2,000 PSI. System is parallel open center type and is equipped with liquid-filled pressure gauge. Oil is supplied to upper cylinders through hydraulic union in center of turret to cable carrier along side of the boom.

Pump: Gear type, direct mount to truck PTO.

PTO: Heavy-duty, high-speed. Cable engaged from cab.

Cab Equipment: PTO cable with indicator lights installed in truck cab. Engine speed control and start/stop installed with control switches in platform remote control box and also located at lower controls. U/L approved 5:BC dry chemical fire extinguisher installed in truck cab.

Operators Manual & Video: Two CDs and one printed copy of operation, maintenance, safety and parts manual provided with each unit. Operational and safety video provided at delivery.

Installation: Unit installed on truck, painted, system and tank filled with oil, tested, inspected, and ready to operate.

Standard Paint: Paint boom and turret red, outriggers red, and bed and boxes black. Top of bed painted with black nonskid surface.

Bumper: Bureau of Motor Carrier Safety rear bumper.

Weight: Approximately 27,500 lbs. with 22' steel-floor bed less truck.

Truck Chassis Required: Approx. 192" C.T. RBM 2,000,000 in-lb. per rail, 16,000 lb. front axle and 56,000 lb. GVWR required. Trucks must have increased cooling, heavy-duty front and rear springs, 12V electrical system with high capacity alternator, cab clearance stop/tail/backup lights, and I.D. lamps. Recommended GVWR is minimum for HI-REACH with flatbed only. Contact factory when additional equipment is to be added.

Options:

14,000 lb Capacity Boom Winch.

500 lb Capacity Platform Material Handling Jib.

Welder and 110V Lines to Platform.

Custom Toolboxes Configurations.

Much More...

Elliott Equipment Company reserves the right to change the specification of any unit at any time without prior notice. This brochure is only a statement of general specifications on the date of this publication. For more detailed info on specific Elliott trucks go to www.elliottequip.com

ELLIOTT EQUIPMENT COMPANY

Elliott Equipment Company
3514 South 25th Street
Omaha, NE 68105

Phone: 402-592-4500
Fax: 402-592-4553
Email: sales@elliottequip.com

Built for You.
www.elliottequip.com

MAXIMUM RANGE CAPABILITIES

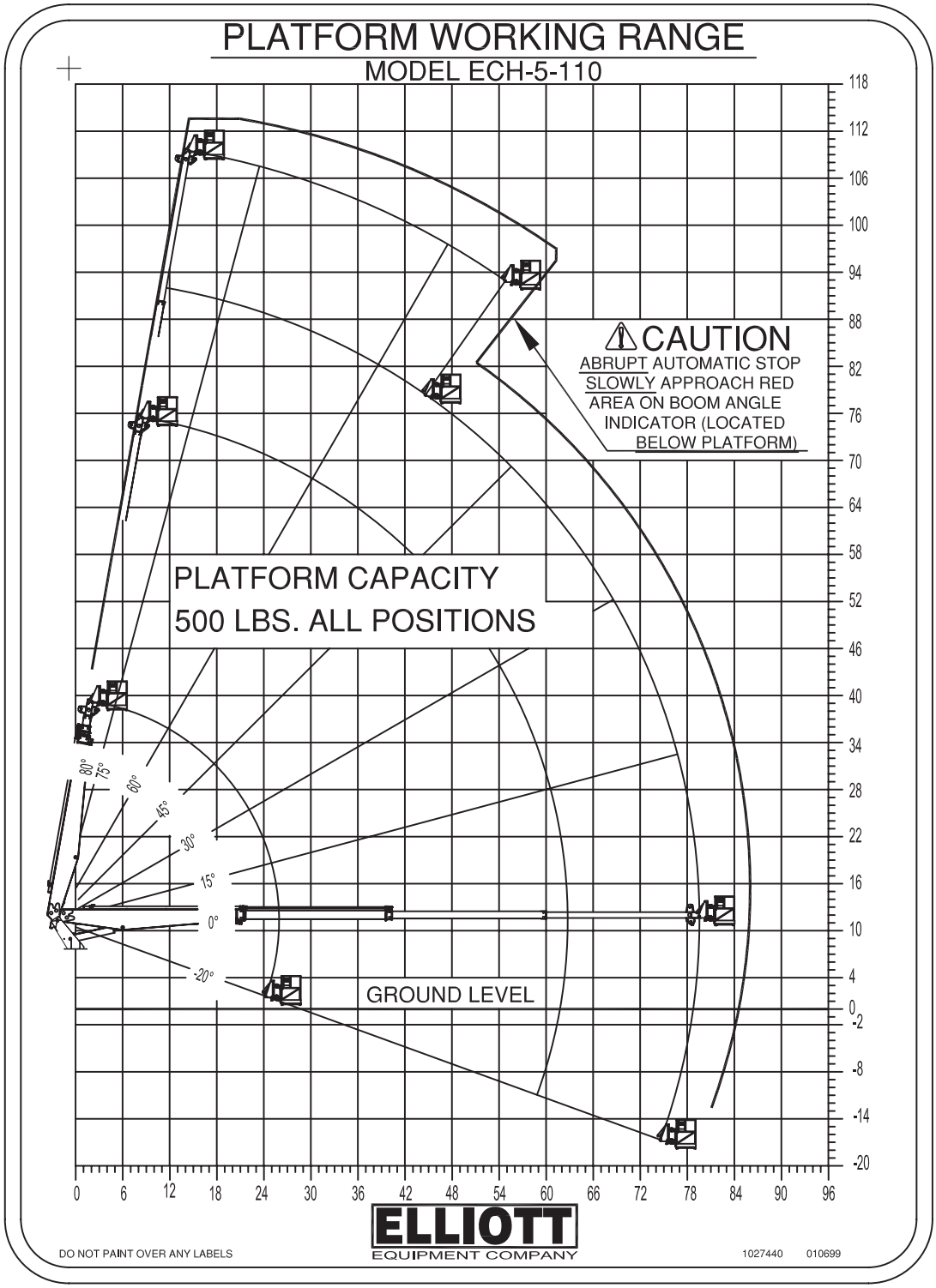

MAXIMUM JIB LIFTING CAPABILIITES

MAXIMUM WORKING LOADS
PLATFORM JIB OPERATION
MODEL ECH-5-110
TOTAL PLATFORM CAPACITY (JIB LOAD PLUS PERSONNEL)

USE OUTRIGGERS AT ALL TIMES • AVOID JERKING LOAD
360° RADIUS •2200 P.S.I. MAX

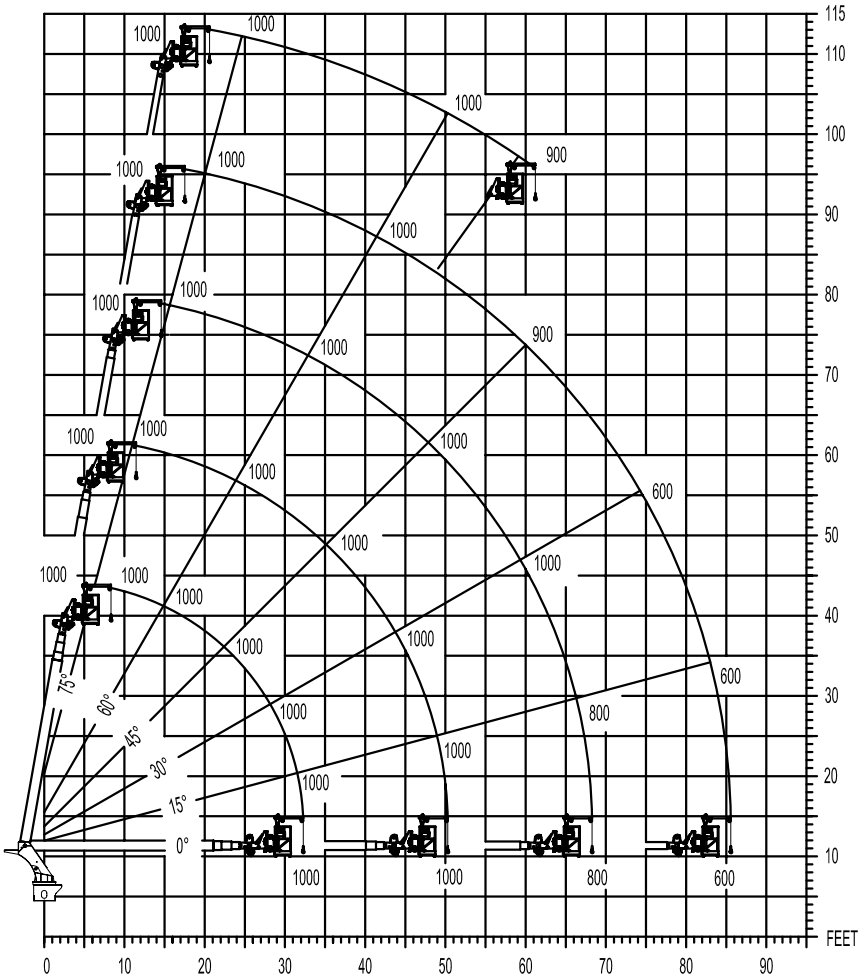

JIB 500 LBS. MAX. PERSONNEL 500 LBS. MAX.

ELLIOTT EQUIPMENT COMPANY

1022780 061798

Elliott Equipment Company
3514 South 25th Street
Omaha, NE 68105

Phone: 402-592-4500
Fax: 402-592-4553
Email: sales@elliottequip.com

MAXIMUM LIFTING CAPABILIITES

MAXIMUM WORKING LOADS
CRANE OPERATION
MODEL H110

USE OUTRIGGERS AT ALL TIMES • AVOID JERKING LOAD
WINCH LINE LOAD WITH BUCKETS OR PLATFORM REMOVED
360° RADIUS • USE 2 PART LINE FOR LOADS OVER 6000 lbs.
DEDUCT 500 POUNDS IF THE PLATFORM IS NOT REMOVED

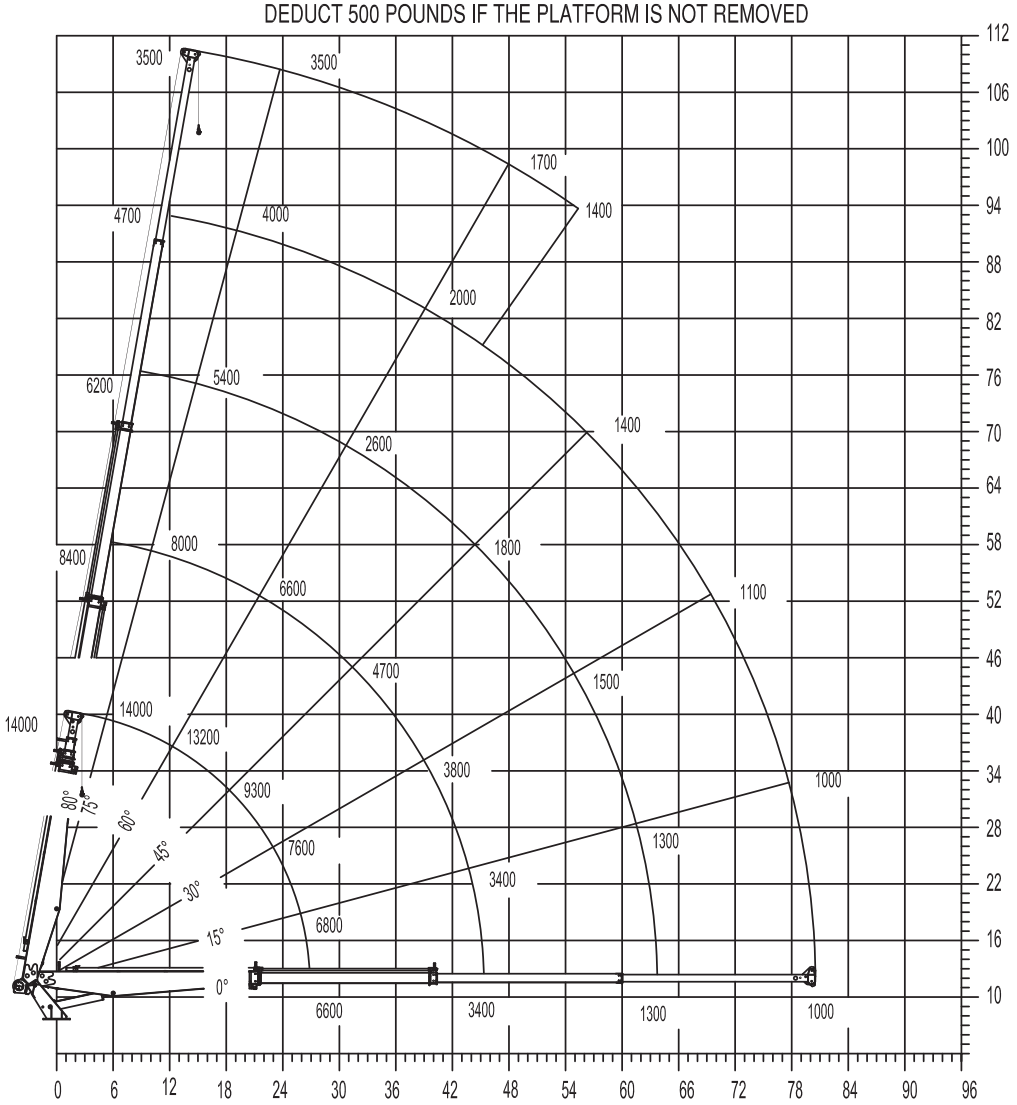

ELLIOTT EQUIPMENT COMPANY

DO NOT PAINT OVER ANY LABELS

1025050 102898

Elliott Equipment Company
3514 South 25th Street
Omaha, NE 68105

Phone: 402-592-4500
Fax: 402-592-4553
Email: sales@elliottequip.com

CHASSIS DATA

	H110R
Wheelbase (WB)	258" / 655 cm
Cab to Tandem (CT)	192" / 488 cm
Cab to End of Frame (EOF)	292" / 742 cm
Frame Section Modulus	16.6 in3 / 120,000 psi / 827,371 kPa
Front Axle Gross Weight Rating	16,000 lb / 7257 kg
Rear Axle Gross Weight Rating	40,000 lb / 18 144 kg
Extended Front Frame	N/A

OPTIONS

Radio Remote Control
Interference protected radio remotes let you get closer to your work and have full control over your machine.

Material Handling Jib
Equip your HiReach platform with a material handling jib crane to handle up to 500 pounds.

Boom-Mounted Winch
Take advantage of the 14,000 lb capacity 2 speed hydraulic winch with 1/2" cable and a load indication system.

Outrigger Pad Holders
Outrigger pad holders safely store your pads for travel and leave plenty of room for tool boxes.

Bed Accessories
Mount a wide variety of accessories including welders, power washers, and generators on the bed.

Platform Accessories
Choose from a list of platform accessories including 110V outlets, welding leads, hydraulic tools, and much more.

Outrigger Extensions
Our pin-on outrigger extensions give you extra clearance for work on hills and around guardrails.

Line Body
Let us work with you to customize a line body to secure your tools and supplies the the best way for your application.

ELLIOTT EQUIPMENT COMPANY

Elliott Equipment Company
3514 South 25th Street
Omaha, NE 68105

Phone: 402-592-4500
Fax: 402-592-4553
Email: sales@elliottequip.com

HiReach™ H110F

TECHNICAL SPECIFICATIONS

H110F SIDE VIEW DIAGRAM

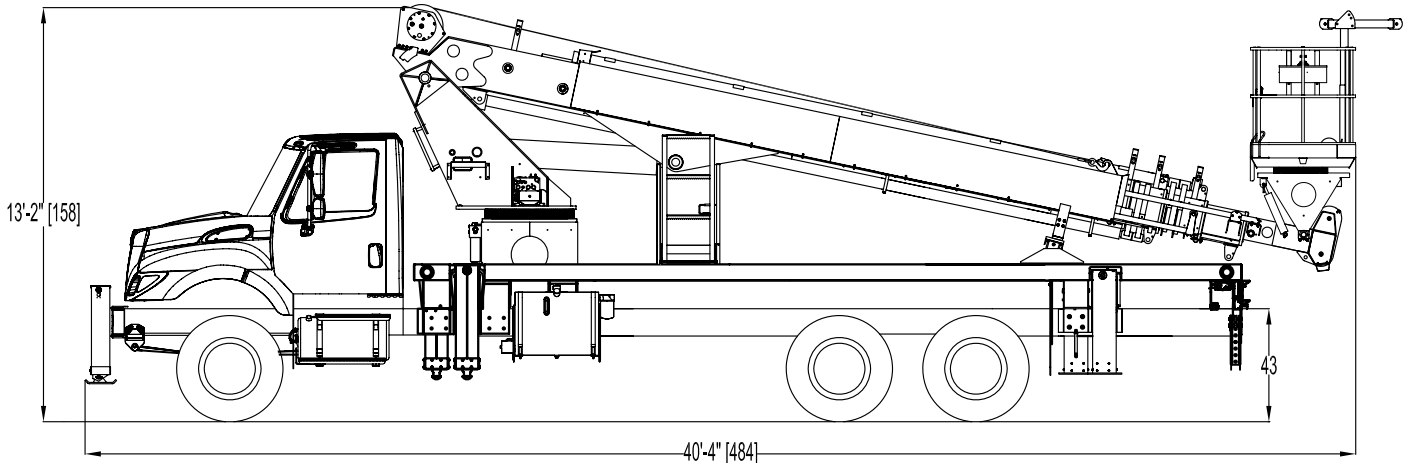

- **Working Height** 117' / 35,1 m
- **Working Side Reach** 84' / 25,6 m
- **Platform Capacity** 600 lbs / 272 kg
- **Platform Size** 40 x 60 in / 102 x 152 cm
- **Platform Type** Top Mount
- **Lifting Capacity (Main Winch)** 14,000 lbs / 6,350 kg
- **Jib Winch** 1,000 lbs / 454 kg
- **Powered Boom Sections** 5
- **Overall Height** 13’2” / 4 m
- **Unit Weight (Bare)** 27,500 lbs / 12,474 kg
- **Outrigger Spread Main** 22' / 6,7m
- **Outrigger Spread Auxiliary** 18’2” / 5,5m
- **Front Gross Axle Weight Rating** 18,000 lbs / 8,165 kg
- **Rear Gross Axle Weight Rating** 40,000 lbs / 18,144 kg

ELLIOTT EQUIPMENT COMPANY

Elliott Equipment Company
3514 South 25th Street
Omaha, NE 68105

Phone: 402-592-4500
Fax: 402-592-4553
Email: sales@elliottequip.com

Built for You.
www.elliottequip.com

TECHNICAL SPECIFICATIONS

Maximum Platform Height: 110' ground to platform floor.

Working Range: 117' max. height and 84' max. side reach.

Work Platform: 40x 60" Top-Mount work platform with 40" high rails. Equipped with two safety lanyard attachment loops and two safety harnesses and 72" lanyards. Platform capacity 600 lbs.

Platform Leveling System: Hydraulic "closed" system consisting of twin platform cylinders interacting with a boom-actuated master cylinder mounted in boom support turret. System provided with factory-set relief valves to compensate for oil expansion or overload during platform leveling operation. Remote releveling controls provided in platform and at ground controls to give precise releveling capability.

Platform Controls: Three individual proportional electronic controllers meter pilot-operated, pressure-compensated modulating valves. Remote controls for boom operations from platform operate from a removable remote control box. Hi/Lo range, start/stop and engine speed toggle controls are also located at platform. Electric remote control cable extends through the electrical slip ring to cable carrier on side of boom to extending boom sections.

Lower Controls: Mounted on curbside of turret.

Outrigger Controls: Parallel open-center stack valve for lever-operated control of right and left outriggers. The outrigger valves are mounted at the rear, under each corner of the bed with roadside valve controlling roadside outriggers and curbside valve controlling curbside outriggers.

Outriggers: "H3" type out-and-down main outriggers with 22' spread. "MH" type out-and-down auxiliary outriggers with 18'2" spread. Single front stabilizer mounted to frame rail extension.

Frame: One piece, all welded, box-type fabrication.

Turret: Reverse offset turret is one-piece weldment mounted on turret box. Turret rotates on large diameter ball bearing.

Rotation: Continuous turret rotation with no stops. Hydraulic motor drives turret through self-locking gear box.

Boom: Steel rectangular tube sections. Assembly includes heavy-duty cylinder fittings, pivot pins, and replaceable wear pads.

Boom Extension: One "piggyback" internal cylinder and two extension cylinders extend the outer boom sections.

Lift: One single-acting full displacement, long stroke cylinder, provides smooth and stable boom elevation. Holding valve prevents boom from falling in event of hose failure.

Cylinders: All cylinders use microhoned cylinder tubing, chrome shafts, top grade packing and protective rod wipers. Cylinder-mounted holding valves provided on all load-holding cylinders.

Hoses: All high pressure hoses are wire braid reinforced with a minimum safety factor of 4 to 1.

Oil Tank Capacity: 70 gallon mounted to truck frame on roadside.

Hydraulic System: Operating pressure is 3,000 PSI. System is parallel open center type and is equipped with liquid-filled pressure gauge. Oil is supplied to upper cylinders through hydraulic union in center of turret to cable carrier along side of the boom.

Pump: Gear type, direct mount to truck PTO.

PTO: Heavy-duty, high-speed. Cable engaged from cab.

Cab Equipment: PTO cable with indicator lights installed in truck cab. Engine speed control and start/stop installed with control switches in platform remote control box and also located at lower controls. U/L approved 5:BC dry chemical fire extinguisher installed in truck cab.

Operators Manual & Video: Two CDs and one printed copy of operation, maintenance, safety and parts manual provided with each unit. Operational and safety video provided at delivery.

Installation: Unit installed on truck, painted, system and tank filled with oil, tested, inspected, and ready to operate.

Standard Paint: Paint boom and turret red, outriggers red, and bed and boxes black. Top of bed painted with black nonskid surface.

Bumper: Bureau of Motor Carrier Safety rear bumper.

Weight: Approximately 27,500 lbs. with 26' steel-floor bed less truck.

Truck Chassis Required: Approx. 192" C.T. RBM 2,000,000 in-lb. per rail, 16,000 lb. front axle and 56,000 lb. GVWR required. Trucks must have increased cooling, heavy-duty front and rear springs, 12V electrical system with high capacity alternator, cab clearance stop/tail/backup lights, and I.D. lamps. Extended front frame rails. Recommended GVWR is minimum for HiReach with flatbed only. Contact factory when additional equipment is to be added.

Options:

14,000 lb Capacity Boom Winch.

1,000 lb Capacity Platform Material Handling Jib.

Welder and 110V Lines to Platform.

Custom Toolboxes Configurations.

Much More...

Elliott Equipment Company reserves the right to change the specification of any unit at any time without prior notice. This brochure is only a statement of general specifications on the date of this publication. For more detailed info on specific Elliott trucks go to www.elliottequip.com

ELLIOTT EQUIPMENT COMPANY

Elliott Equipment Company
3514 South 25th Street
Omaha, NE 68105

Phone: 402-592-4500
Fax: 402-592-4553
Email: sales@elliottequip.com

Built for You.
www.elliottequip.com

MAXIMUM WORKING RANGE

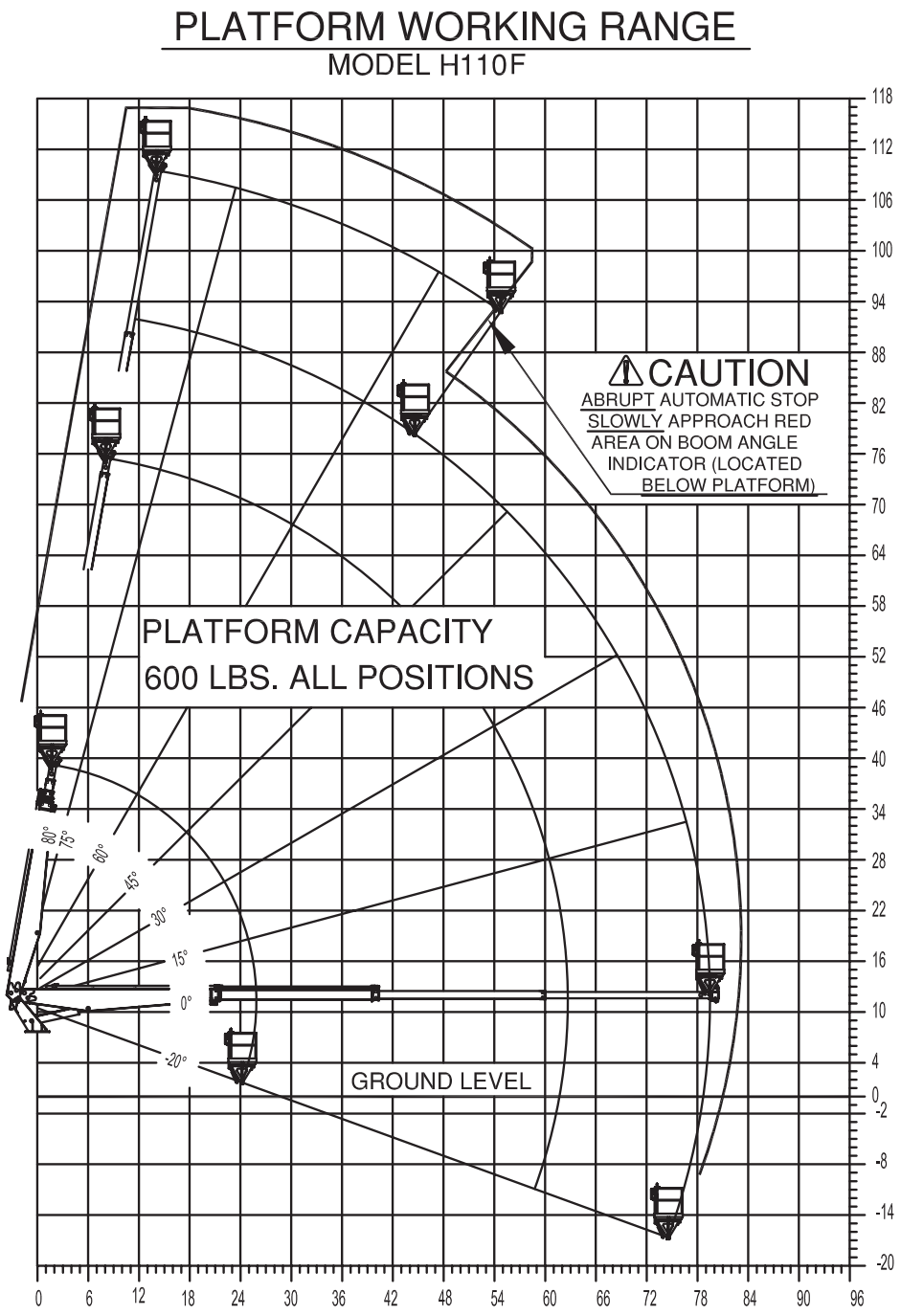

ELLIOTT EQUIPMENT COMPANY

Elliott Equipment Company
3514 South 25th Street
Omaha, NE 68105

Phone: 402-592-4500
Fax: 402-592-4553
Email: sales@elliottequip.com

LOAD CHART - PLATFORM JIB OPERATION

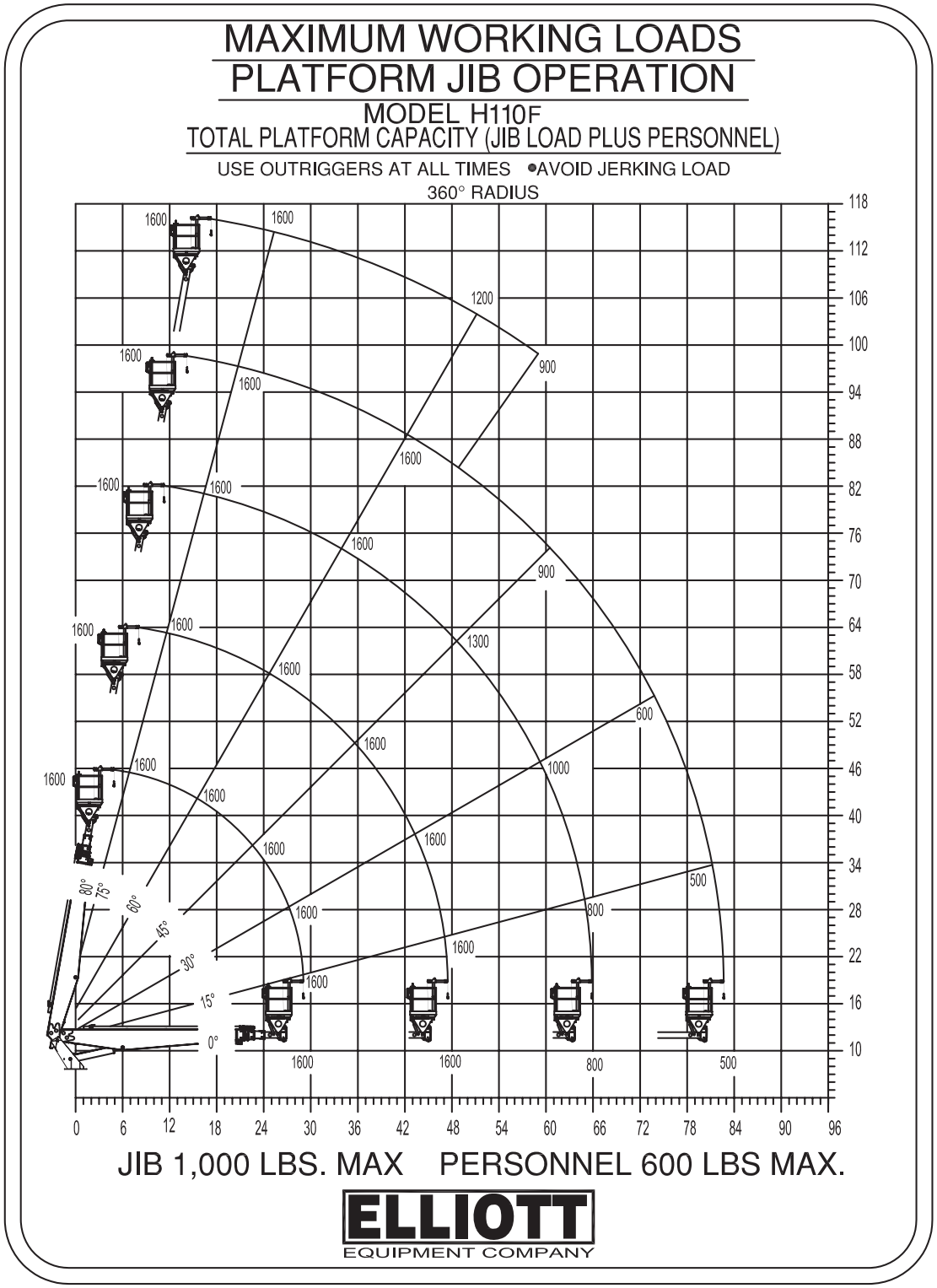

LOAD CHART - MAIN BOOM WINCH OPERATION

MAXIMUM WORKING LOADS
CRANE OPERATION
MODEL H110F

USE OUTRIGGERS AT ALL TIMES • AVOID JERKING LOAD
WINCH LINE LOAD WITH BUCKETS OR PLATFORM REMOVED
360° RADIUS • USE 2 PART LINE FOR LOADS OVER 6000 lbs.
DEDUCT 500 POUNDS IF THE PLATFORM IS NOT REMOVED

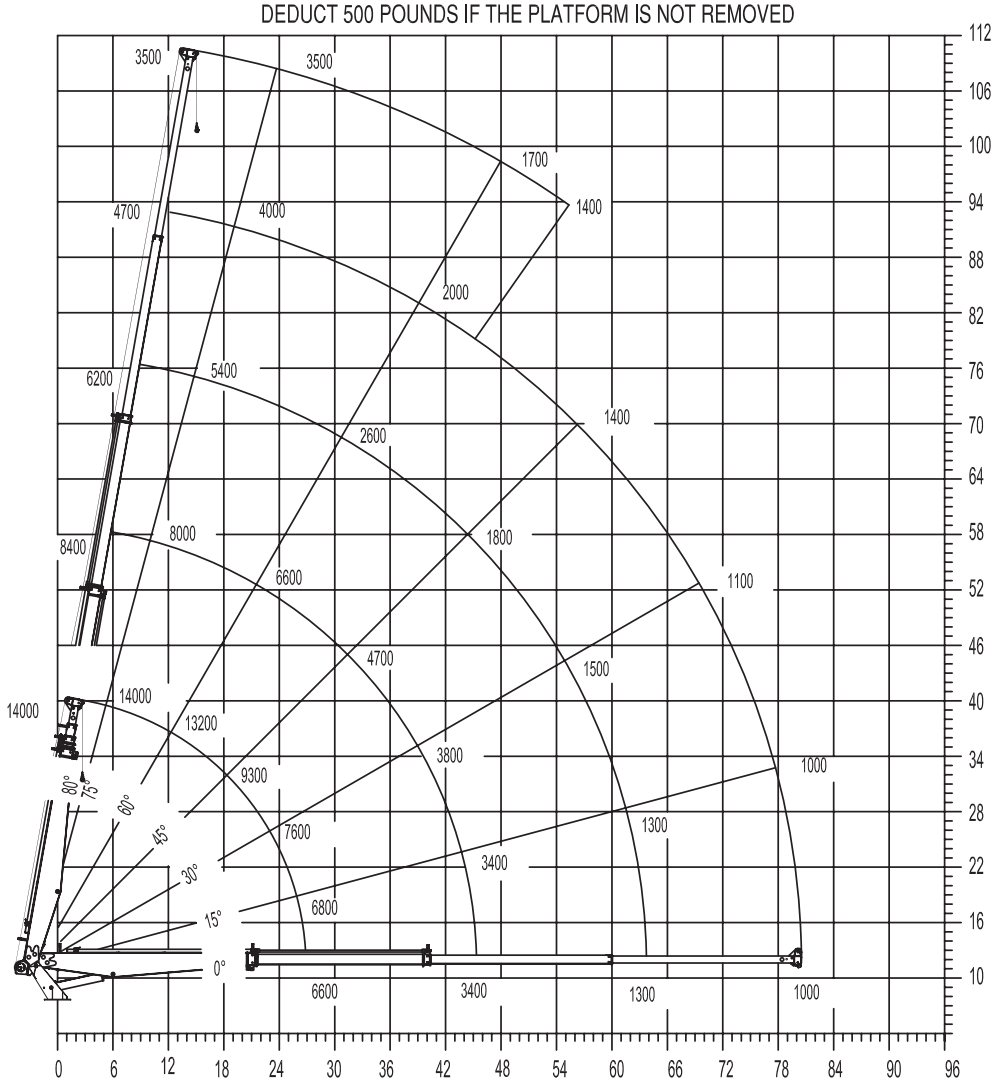

ELLIOTT
EQUIPMENT COMPANY

Elliott Equipment Company
3514 South 25th Street
Omaha, NE 68105
Phone: 402-592-4500
Fax: 402-592-4553
Email: sales@elliottequip.com

CHASSIS DATA

	H110F
Wheelbase (WB)	258" / 655 cm
Cab to Tandem (CT)	192" / 488 cm
Cab to End of Frame (EOF)	323" / 820 cm
Frame Section Modulus	16.6 in3 / 120,000 psi
Front Axle Gross Weight Rating	18,000 lb / 8,165 kg
Rear Axle Gross Weight Rating	40,000 lb / 18,144 kg
Extended Front Frame	Required for Front Stabilizer

OPTIONS

Radio Remote Control
Interference protected radio remotes let you get closer to your work and have full control over your machine.

Material Handling Jib
Equip your HiReach platform with a material handling jib crane to handle up to 1,000 pounds.

Boom-Mounted Winch
Take advantage of the 14,000 lb capacity 2 speed hydraulic winch with 1/2" cable and a load indication system.

Outrigger Pad Holders
Outrigger pad holders safely store your pads for travel and leave plenty of room for tool boxes.

Bed Accessories
Mount a wide variety of accessories including welders, power washers, and generators on the bed.

Platform Accessories
Choose from a list of platform accessories including 110V outlets, welding leads, hydraulic tools, and much more.

Outrigger Extensions
Our pin-on outrigger extensions give you extra clearance for work on hills and around guardrails.

Line Body
Let us work with you to customize a line body to secure your tools and supplies the the best way for your application.

ELLIOTT EQUIPMENT COMPANY

Elliott Equipment Company
3514 South 25th Street
Omaha, NE 68105

Phone: 402-592-4500
Fax: 402-592-4553
Email: sales@elliottequip.com

HiReach™ L115

TECHNICAL SPECIFICATIONS

L115 SIDE VIEW DIAGRAM

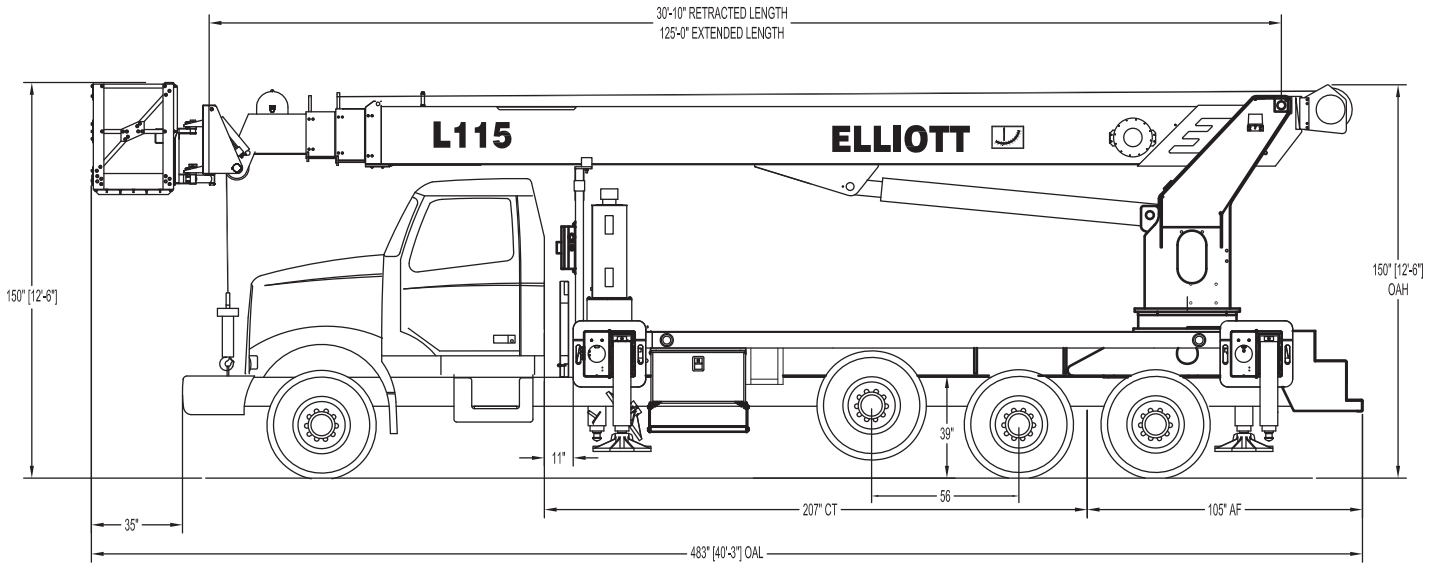

• **Working Height**	115' / 35 m
• **Working Side Reach**	80' / 24,4 m
• **Platform Capacity**	600 lbs / 272 kg
• **Platform Size**	30 x 54" / 76 x 137 cm
• **Platform Type**	End-Hung
• **Lifting Capacity (Main Winch)**	14,000 lbs / 6350 kg
• **Jib Winch**	N/A

• **Powered Boom Sections**	4
• **Overall Height**	12'6" / 3,8 m
• **Unit Weight (Bare)**	30,400 lb / 13 789 kg
• **Outrigger Spread Main**	20' / 6,1 m
• **Outrigger Spread Auxiliary**	20' / 6,1 m
• **Front Gross Axle Weight Rating**	20,000 lbs / 9072 kg
• **Rear Gross Axle Weight Rating**	40,000 lbs / 18 144 kg

ELLIOTT EQUIPMENT COMPANY

Elliott Equipment Company
3514 South 25th Street
Omaha, NE 68105

Phone: 402-592-4500
Fax: 402-592-4553
Email: sales@elliottequip.com

Built for You.
www.elliottequip.com

TECHNICAL SPECIFICATIONS

Maximum Platform Height: 110' ground to platform floor.

Working Range: 115' max. height and 80' max. side reach.

Work Platform: 30"x54" end-hung work platform with 40" high rails. Equipped with two safety lanyard attachment loops and two safety harnesses and 72" lanyards. Platform capacity 600 lbs.

Platform Leveling System: Hydraulic self-contained system consisting of twin platform cylinders interacting with electro-proportional leveling control system and pump motor tank assembly mounted on boom tip. Includes heavy duty deep cycle battery supply and remote charging system for automatic leveling operation.

Platform Controls: Fully proportional wireless remote controller with boom control functions. Platform leveling and rotation controls located within the platform.

Lower Controls: Rotating turret standup operator control station on curbside of crane. Includes four single axis levers to control main boom functions.

Outrigger Controls: Outriggers shall be controlled by ground operated outrigger controls located on the street side and curb side of the unit, directly below the bed.

Outriggers: Front and rear out and down outriggers with 20' spread.

Frame: One piece, all welded, box-type fabrication with integral outrigger mounts.

Turret: Reverse offset turret is one-piece weldment mounted on subframe. Turret rotates on large diameter ball bearing.

Rotation: Continuous turret rotation with no stops. Hydraulic motor drives turret through planetary gear box with automatic brake.

Boom: 4-plate steel design. Assembly includes heavy-duty cylinder fittings, pivot pins, and replaceable wear pads.

Boom Extension: One double-acting, two stage hydraulic clinder extends the boom sections proportionally by means of cables.

Lift: One double-acting cylinder provides smooth and stable boom elevation. Holding valve prevent boom from falling in event of hose failure.

Cylinders: All cylinders use microhoned cylinder tubing, chrome shafts, top grade packing and protective rod wipers. Cylinder-mounted holding valves provided on all load-holding cylinders.

Hoses: All high pressure hoses are wire braid reinforced with a minimum safety factor of 4 to 1.

Oil Tank Capacity: 143 gallon mounted on top of front outriggers.

Hydraulic System: Operating pressure is 3,000 PSI. System is parallel closed center type and is equipped with liquid-filled pressure gauge. Oil is supplied to upper cylinders through hydraulic union in center of turret. Cable reel to provide 12 volt charging circuit to platform hydraulic control system.

Pump: Piston type, direct mount to truck PTO.

PTO: Heavy-duty, high-speed. Switch engaged from cab.

Cab Equipment: PTO cable or switch with indicator lights installed in truck cab. Master power switch on dashboard. U/L approved 5:BC dry chemical fire extinguisher installed in truck cab.

Operators Manual & Video: Two CDs and one printed copy of operation, maintenance, safety and parts manual provided with each unit. Operational and safety video provided at delivery.

Installation: Unit installed on truck, painted, system and tank filled with oil, tested, inspected, and ready to operate.

Standard Paint: Paint boom and turret red, outriggers red, and bed and boxes black. Top of steel bed painted with black nonskid surface.

Bumper: Bureau of Motor Carrier Safety rear bumper.

Weight: Approximately 30,000 lbs. with 16' steel-floor bed less truck.

Truck Chassis Required: Approx. 192" C.T. RBM 3,300,000 in-lb. per rail, 20,000 lb. front axle and 60,000 lb. GVWR required. Trucks must have increased cooling, heavy-duty front and rear springs, 12V electrical system with high capacity alternator, cab clearance stop/tail/backup lights, and I.D. lamps. Extended front frame rails. Recommended GVWR is minimum for HiReach with flatbed only. Contact factory when additional equipment is to be added.

Options:

14,000 lb Capacity Boom Winch.

Automatic Safety Rotation Lockout.

Winch Drum Tensioner.

Hydraulic Oil Cooler with Fan.

LED Lighting System.

Hydraulic Tool Circuit on Bed.

Boom Mounted Hose Reel.

Much More....

Elliott Equipment Company reserves the right to change the specification of any unit at any time without prior notice. This brochure is only a statement of general specifications on the date of this publication. For more detailed info on specific Elliott trucks go to www.elliottequip.com

ELLIOTT EQUIPMENT COMPANY

Elliott Equipment Company
3514 South 25th Street
Omaha, NE 68105

Phone: 402-592-4500
Fax: 402-592-4553
Email: sales@elliottequip.com

Built for You.
www.elliottequip.com

MAXIMUM WORKING RANGE

ELLIOTT EQUIPMENT COMPANY

MODEL L115 103-ft BOOM

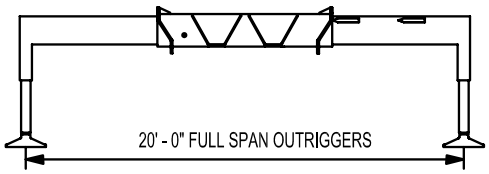

RANGE DIAGRAM WITH FULL SPAN OUTRIGGERS

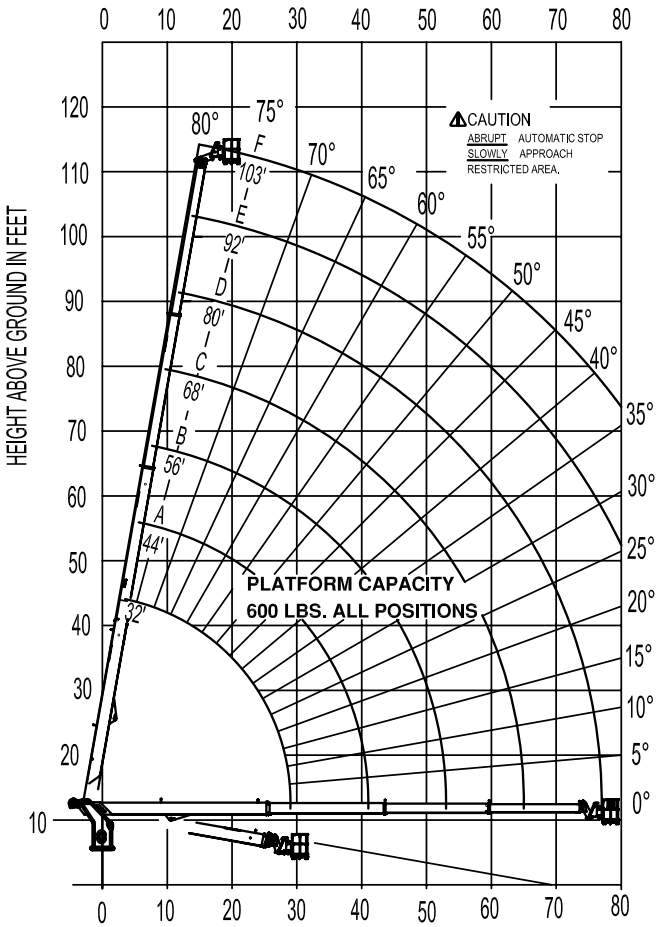

NOTE:

1. Personnel handling is allowed only with full span outriggers.

2. Boom load ratings are based on loaded boom radius. Loaded boom angles are given as reference only.

3. When handling personnel, radius is measured to the front rail of the platform. Reference loaded boom angles must be increased for platform offset.

AREA OF OPERATION:

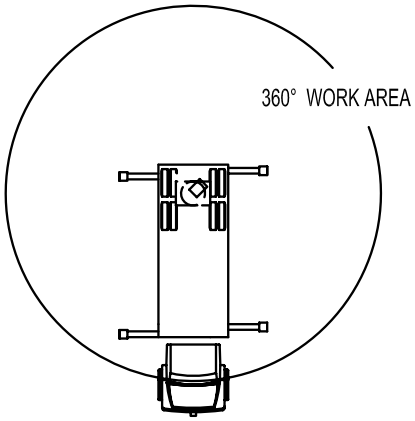

1179760 021612

MAXIMUM WINCH LIFTING CAPABILITIES

ELLIOTT EQUIPMENT COMPANY

MODEL L115

103-ft BOOM

360° FULL CHART

MAIN BOOM LOAD RATINGS WITH FULLY EXTENDED OUTRIGGERS (LMI MODE 0003)

MAIN BOOM LOAD RATINGS

LOAD RATINGS IN lbs WITH OUTRIGGERS AND STABILIZERS EXTENDED

LOAD RADIUS (FT)	BOOM ANGLE (deg °)	32-ft	BOOM ANGLE (deg °)	A 44-ft	BOOM ANGLE (deg °)	B 56-ft	BOOM ANGLE (deg °)	C 68-ft	BOOM ANGLE (deg °)	D 80-ft	BOOM ANGLE (deg °)	E 92-ft	BOOM ANGLE (deg °)	F 103-ft
6	78.5	18,000												
8	74.6	18,000												
10	70.8	18,000	77.1	18,000	76.6	18,000								
12	66.4	18,000	74.3	18,000	74.5	17,000								
14	62.1	16,300	71.4	16,500	72.3	14,800	79.5	12,000						
16	57.8	14,000	68.4	14,400	70.2	13,500	77.7	11,500						
18	53.1	12,000	65.4	12,900	68.0	12,800	75.8	11,000						
20	47.9	10,000	62.3	9,600	65.8	11,100	73.9	10,200	77.1	8,000				
25	32.8	7,000	54.0	7,000	60.0	8,200	69.0	7,700	73.4	6,600	77.0	6,250	79.2	4,800
30			44.6	6,100	53.9	6,400	64.2	5,800	69.4	5,200	73.7	5,200	76.3	4,500
35			33.3	4,700	47.3	5,000	59.1	4,700	65.2	4,300	70.3	4,400	73.3	3,900
40			15.3	3,650	39.8	3,800	53.7	3,800	60.8	3,600	66.6	4,100	70.1	3,400
45					31.0	3,000	47.8	3,000	56.4	2,800	62.8	3,300	66.7	3,100
50					18.8	2,400	41.3	2,450	51.6	2,300	58.9	2,700	63.2	2,700
55							33.8	2,000	46.4	1,900	54.8	2,350	59.7	2,350
60							24.4	1,600	40.7	1,600	50.4	2,000	56.0	2,000
65									34.1	1,200	45.7	1,600	52.1	1,650
70									26.3	900	40.5	1,300	48.1	1,350
75									14.8	780	34.8	1,000	43.9	1,100
80											28.0	780	39.2	780
	0	5,000	0	3,400	0	2,200	0	1,400	0	780				

ELLIOTT EQUIPMENT CO. SUPPLIED LOADLINE EQUIPMENT DEDUCTIONS:
DOWNHAUL WEIGHT .....180 lbs
ONE SHEAVE BLOCK.....270 lbs

ADD 200 LBS. IF EZR PLATFORM IS NOT ATTACHED.

NOTICE

- DO NOT DEADHEAD LINE BLOCK AGAINST BOOM TIP WHEN EXTENDING BOOM
- KEEP AT LEAST 5 WRAPS OF LOADLINE ON THE WINCH DRUM AT ALL TIMES
- USE ONLY 9/16" DIAMETER WIRE ROPE, AS SPECIFIED BELOW, WITH THE PROPER BREAKING STRENGTHS LISTED
- ANTI-TWO-BLOCK SYSTEM MUST BE IN GOOD OPERATING CONDITION BEFORE OPERATING CRANE. SEE OPERATION & SAFETY MANUAL

AREA OF OPERATION:

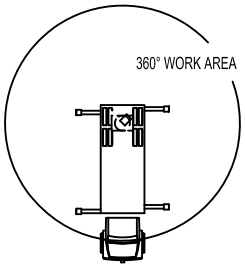

1-PART LINE	2-PART LINE	
MAX PULL: 9,060 lbs	18,000 lbs	9/16" - SPIN RESISTANT (5:1 S.F.) 45,300-lbs. BREAKING STRENGTH

CRANE MEETS ASME B30.5 REQUIREMENTS AT TIME OF MANUFACTURE

DO NOT PAINT OVER ANY LABELS 1176280 12/23/2011

Elliott Equipment Company
3514 South 25th Street
Omaha, NE 68105

Phone: 402-592-4500
Fax: 402-592-4553
Email: sales@elliottequip.com

CHASSIS DATA

	L115
Wheelbase (WB)	258" / 655 cm
Cab to Tandem (CT)	192" / 488 cm
Cab to End of Frame (EOF)	286" / 726 cm
Frame Section Modulus	27.5 in3 / 120,000 psi
Front Axle Gross Weight Rating	20,000 lb / 9072 kg
Rear Axle Gross Weight Rating	40,000 lb / 18 144 kg
Extended Front Frame	Required to Reduce Front Overhang

Chassis data is minimum general requirements-not for engineering.
Actual dimensions and truck data will depend on truck selection and axle configuration.

OPTIONS

Ergonomic Ride-Around Seated Controls
Interference protected radio remotes let you get closer to your work and have full control over your machine.

Boom-Mounted Winch
Take advantage of the 14,000 lb capacity 2 speed hydraulic winch with 1/2" cable and a load indication system.

Outrigger Pad Holders
Outrigger pad holders safely store your pads for travel and leave plenty of room for tool boxes.

Custom Paint
Choose from a wide list of high quality paint applications including Elliott's standard white or red paint, metallic paints, or multiple colors.

Extended Truck Cab for More Seating
Configure your machine with an extended cab chassis for increased seating and more productivity out in the field.

Toolbox Configurations
Let us work with you to install a series of steel toolboxes above and below the bed to store tools and supplies.

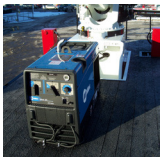

Bed Accessories
Mount a wide variety of accessories including welders, power washers, and generators on the bed.

Custom Rear Bumpers
Elliott's custom fabrication shop offers a wide range of specialized rear bumpers with integrated steps, toolboxes and much more.

ELLIOTT EQUIPMENT COMPANY

Elliott Equipment Company
3514 South 25th Street
Omaha, NE 68105

Phone: 402-592-4500
Fax: 402-592-4553
Email: sales@elliottequip.com

Built for You.
www.elliottequip.com

E-Line™ E120

TECHNICAL SPECIFICATIONS

E120 SIDE VIEW DIAGRAM

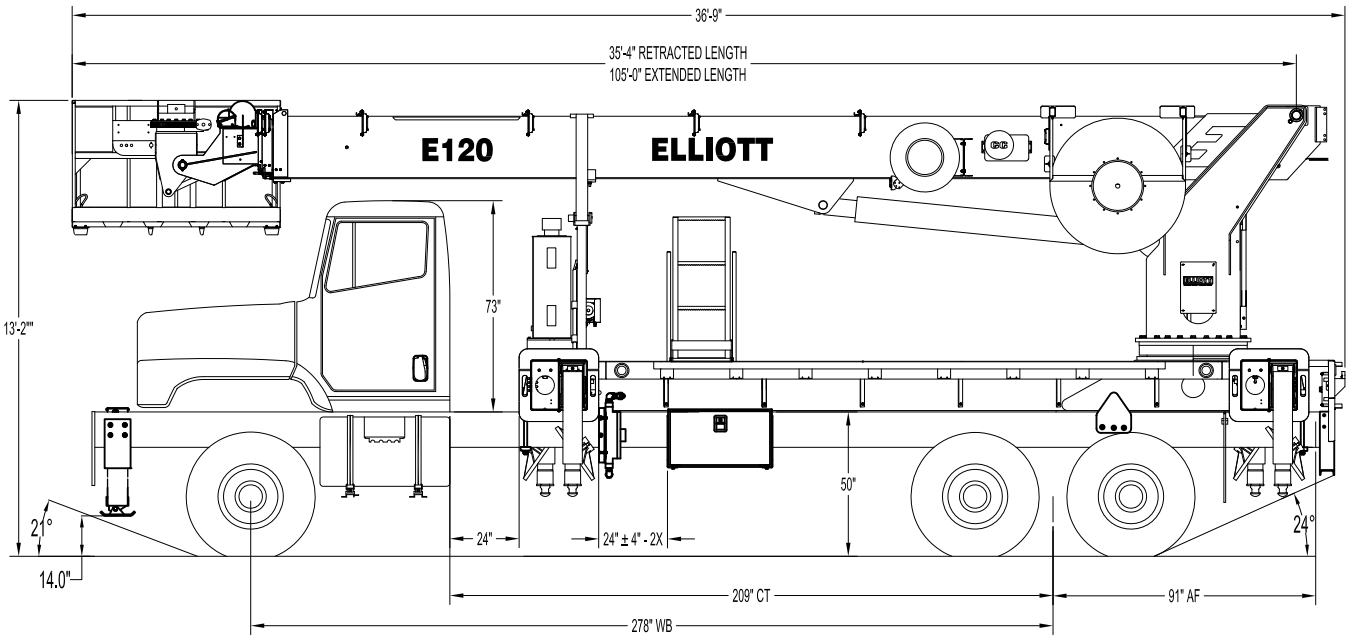

• **Working Height**	120'/36,6 m	• **Powered Boom Sections**	4
• **Working Side Reach**	80'/24,4 m	• **Overall Height**	13'2"/4,1 m
• **Platform Capacity**	600 lbs/272 kg	• **Unit Weight (Bare)**	28,500 lbs/12 927 kg
• **Platform Size**	34x72"/86x183 cm	• **Outrigger Spread Main**	20'/6,1 m
• **Platform Type**	End Hung	• **Outrigger Spread Auxiliary**	20'/6,1 m
• **Jib Winch**	1,500 lbs/680 kg	• **Front Gross Axle Weight Rating**	20,000 lbs/9072 kg
• **Certification (ANSI)**	ANSI A92.2	• **Rear Gross Axle Weight Rating**	40,000 lbs/18 144 kg

ELLIOTT EQUIPMENT COMPANY

Elliott Equipment Company
3514 South 25th Street
Omaha, NE 68105

Phone: 402-592-4500
Fax: 402-592-4553
Email: sales@elliottequip.com

Built for You.
www.elliottequip.com

TECHNICAL SPECIFICATIONS

Minimum Platform Height: 115' ground to platform floor.

Working Range: 120' max. height and 80' max. side reach.

Work Platform: 34x72" End Hung work platform with 40" high rails and gate with latch. Equipped with two safety lanyard attachment loops and two safety harnesses. Platform capacity 600 lbs.

Platform Leveling System: Hydraulic system consisting of a single platform cylinder interacting with an electro-proportional level sensing system. Remote releveling controls provided in platform and at ground controls to give precise releveling capability.

Platform Controls: Three individual proportional controllers meter pressure-compensated hydraulic valves. Boom ground controls are mounted on curbside of turret. Remote controls for boom operations from platform operate from a wireless radio remote control box. Hi/Lo range, start/stop and engine speed toggle controls are also located on the radio remote controls.

Lower Controls: Mounted on curbside of turret.

Outrigger Controls: Parallel open-center stack valve for lever-operated control of right and left outriggers. The outrigger valves are mounted at the rear, under each corner of the bed with roadside valve controlling roadside outriggers and curbside valve controlling curbside outriggers.

Outriggers: Out-and-Down outriggers with 20 ft. spread. Ball socket aluminum removable pads 22" in diameter with stowage on outrigger legs. Front stabilizer controlled by switch at front stabilizer bumper.

Frame: One piece, all welded, box-type fabrication with integral outrigger mounts. Bolt-on torque frame distributes load to front of truck.

Turret: One-piece weldment with reverse offset design. Turret rotates on large diameter ball bearing connected to subframe with 36 bolts.

Rotation: Continuous turret rotation with no stops. Hydraulic motor drives turret through self-locking gear box with pressure released brake.

Boom: 4-section plated boom featuring fully proportional extension. Includes hydraulic hose reel and electric hose reel for platform operation.

Boom Extension: Double acting, two-stage hydraulic extension cylinder with holding valves, acting on a cable system, extends 2nd, 3rd and 4th boom sections.

Lift: One double-acting long stroke cylinder provides smooth and stable boom elevation. Holding valve prevent boom from falling in event of hose failure.

Cylinders: All cylinders use microhoned cylinder tubing, chrome shafts, top grade packing and protective rod wipers. Cylinder-mounted holding valves provided on all load-holding cylinders.

Hoses: All high pressure hose is wire braid reinforced with a minimum safety factor of 4 to 1.

Oil Tank Capacity: 143 gallon mounted behind chassis cab on front outrigger housing.

Hydraulic System: Operating pressure approximately 3,500 PSI. System is a closed center type and is equipped with liquid-filled pressure gauge. Hydraulic reservoir equipped with 10 micron return line filter and shut off valve.

Pump: Piston type, direct mount to truck PTO.

PTO: Heavy-duty, high-speed. Engaged from cab.

Cab Equipment: PTO with indicator lights installed in truck cab. Engine speed control and start/stop installed with control switches in platform remote control box and also located at lower controls. U/L approved 5:BC dry chemical fire extinguisher installed in truck cab.

Operators Manual & Video: Two copies of operation, maintenance, safety and parts manual provided with each unit. Operational and safety video provided at delivery.

Installation: Unit installed on customer's truck, painted, system and tank filled with oil, tested, inspected, certified and ready to operate.

Standard Paint: Paint Hi-Reach white, outriggers red, and bed and boxes black. Top of bed painted with black nonskid surface.

Weight: Approximately 28,500 lbs. with 16' steel-floor bed less truck.

Truck Chassis Required: Approx. 204" C.T. RBM 3,000,000 in-lb. per rail, 20,000 lb. front axle and 60,000 lb. GVWR required. Trucks must have increased cooling, heavy-duty front and rear springs, 12V electrical system with high capacity alternator, cab clearance stop/tail/backup lights, and I.D. lamps. Additional equipment to consider: front tow hook, pintle hook, mud and snow tires for off highway use. Recommended GVWR is minimum for E120 with flatbed only. Contact factory when additional equipment is to be added.

Additional Options:

Rotating Open Seated Controls.

Crane Cab with Air Conditioning.

1,500 lb Jib Winch in Platform.

500KV Insulated Jib & Basket

Much More...

Elliott Equipment Company reserves the right to change the specification of any unit at any time without prior notice. This brochure is only a statement of general specifications on the date of this publication. For more detailed info on specific Elliott trucks go to www.elliottequip.com

ELLIOTT EQUIPMENT COMPANY

Elliott Equipment Company
3514 South 25th Street
Omaha, NE 68105

Phone: 402-592-4500
Fax: 402-592-4553
Email: sales@elliottequip.com

LOAD AND RANGE CHART - 1,500 LB (680 KG) JIB

MAXIMUM WORKING LOADS
PLATFORM JIB OPERATION
MODEL E120

JIB WINCH LINE LOAD (POUNDS) WITH PLATFORM ATTACHED JIB

USE OUTRIGGERS AT ALL TIMES AVOID JERKING LOAD

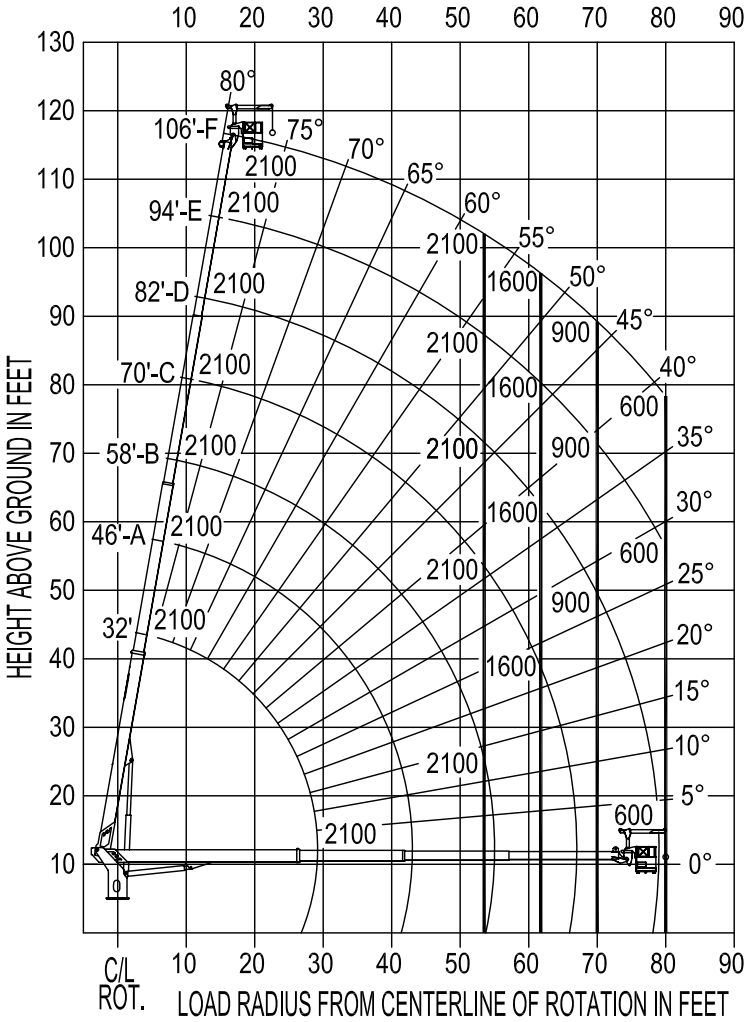

JIB 1500 LBS. MAX. PERSONNEL 600 LBS. MAX.

ELLIOTT EQUIPMENT COMPANY

Elliott Equipment Company
3514 South 25th Street
Omaha, NE 68105

Phone: 402-592-4500
Fax: 402-592-4553
Email: sales@elliottequip.com

TRUCK CHASSIS SPECIFICATIONS

	E120
Wheelbase (WB)	268" / 681 cm
Cab to Tandem (CT)	204" / 518 cm
Cab to End of Frame (EOF)	272" / 691 cm
Frame Section Modulus	30.0 in3 / 110,000 psi
Front Axle Gross Weight Rating	20,000 lb / 9072 kg
Rear Axle Gross Weight Rating	40,000 lb / 18 144 kg
Extended Front Frame	Required for Front Stabilizer

Chassis data is minimum general requirements-not for engineering.
Actual dimensions and truck data will depend on truck selection and axle configuration.

OPTIONS

Radio Remote Control
Interference protected wireless radio remotes let you get closer to your work and have full control over your machine.

Material Handling Jib
Equip your E120 platform with a material handling jib to lift or position up to 1,500 pounds of equipment from within the platform.

Deep-Penetration Outriggers
Elliott's two-stage outriggers provide extreme ground penetration for even the most difficult offroad environments. Set up in more places with Elliott.

Open Seated Control Station
Choose Elliott's open seated control console for maximum comfort on the job site. Featuring an adjustable weather-proof seat, joystick controls, and LMI display.

500KV Insulated Jib for Live Line Work
Work with Elliott's engineering team to equip a 500KV EHV insulated jib and man basket. The 'EHV' package includes the swing out insulated jib and basket.

110V Line to Platform
Add a 110V or 220V electrical cable to the work platform to permit the use of tools without requiring an auxiliary power source in the platform.

6x6 Chassis Mounting Configurations
Elliott's engineering department will work with you to install on a wide range of chassis including 6x6 chassis requiring custom long-stroke outriggers.

Climate Specific Solutions
From extreme cold-weather hydraulic systems, to desert climate hydraulic oil coolers, Elliott has a solution for your business and jobsite needs.

ELLIOTT EQUIPMENT COMPANY

Elliott Equipment Company
3514 South 25th Street
Omaha, NE 68105

Phone: 402-592-4500
Fax: 402-592-4553
Email: sales@elliottequip.com

HiReach™ L140

TECHNICAL SPECIFICATIONS

L140 SIDE VIEW DIAGRAM

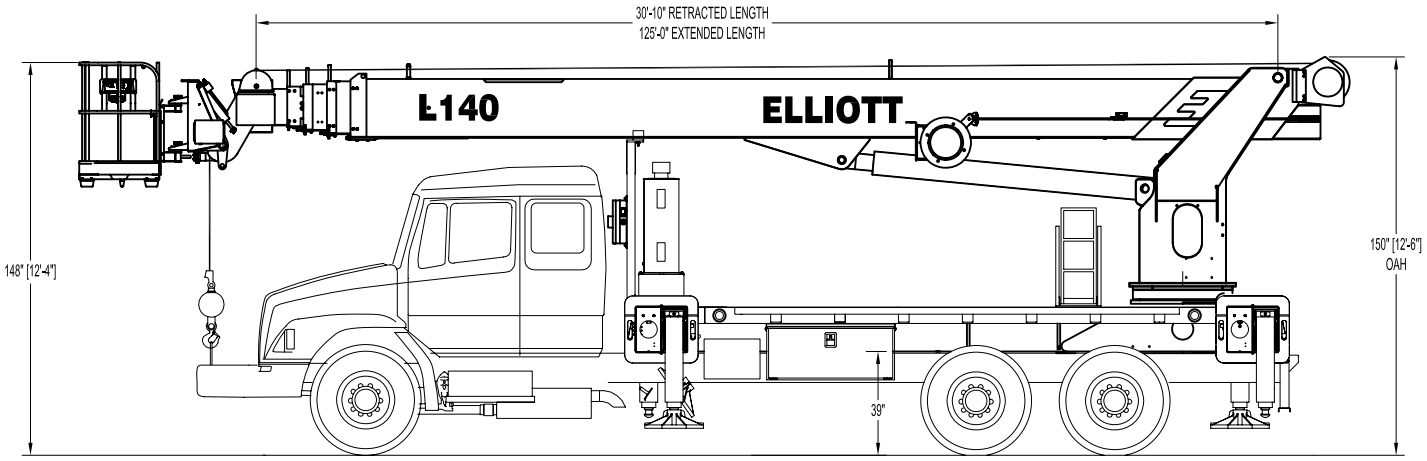

- **Working Height** 140' / 42,6 m
- **Working Side Reach** 80' / 24,4 m
- **Platform Capacity** 600 lbs / 272 kg
- **Platform Size** 30 x 54 in / 76 x 137 cm
- **Platform Type** End-Hung
- **Lifting Capacity (Main Winch)** 14,000 lbs / 6350 kg
- **Jib Winch** N/A
- **Powered Boom Sections** 5
- **Overall Height** 12'6" / 3,8 m
- **Unit Weight (Bare)** 30,000 lbs / 13 608 kg
- **Outrigger Spread Main** 20' / 6,1 m
- **Outrigger Spread Auxiliary** 20' / 6,1 m
- **Front Gross Axle Weight Rating** 20,000 lbs / 9072 kg
- **Rear Gross Axle Weight Rating** 40,000 lbs/18 144 kg

ELLIOTT EQUIPMENT COMPANY

Elliott Equipment Company
3514 South 25th Street
Omaha, NE 68105

Phone: 402-592-4500
Fax: 402-592-4553
Email: sales@elliottequip.com

Built for You.
www.elliottequip.com

TECHNICAL SPECIFICATIONS

Maximum Platform Height: 135' ground to platform floor.

Working Range: 140' max. height and 80' max. side reach.

Work Platform: 30"x54" end-hung work platform with 40" high rails. Equipped with two safety lanyard attachment loops and two safety harnesses and 72" lanyards. Platform capacity 600 lbs.

Platform Leveling System: Hydraulic self-contained system consisting of twin platform cylinders interacting with electro-proportional leveling control system and pump motor tank assembly mounted on boom tip. Includes heavy duty deep cycle battery supply and remote charging system for automatic leveling operation.

Platform Controls: Fully proportional wireless remote controller with boom control functions. Platform leveling and rotation controls located within the platform.

Lower Controls: Rotating turret standup operator control station on curbside of crane. Includes four single axis levers to control main boom functions.

Outrigger Controls: Outriggers shall be controlled by ground operated outrigger controls located on the street side and curb side of the unit, directly below the bed.

Outriggers: Front and rear out and down outriggers with 20' spread.

Frame: One piece, all welded, box-type fabrication with integral outrigger mounts.

Turret: Reverse offset turret is one-piece weldment mounted on subframe. Turret rotates on large diameter ball bearing.

Rotation: Continuous turret rotation with no stops. Hydraulic motor drives turret through planetary gear box with automatic brake.

Boom: 4-plate steel design. Assembly includes heavy-duty cylinder fittings, pivot pins, and replaceable wear pads.

Boom Extension: One double-acting, two stage hydraulic clinder extends the boom sections proportionally by means of cables.

Lift: One double-acting cylinder provides smooth and stable boom elevation. Holding valve prevent boom from falling in event of hose failure.

Cylinders: All cylinders use microhoned cylinder tubing, chrome shafts, top grade packing and protective rod wipers. Cylinder-mounted holding valves provided on all load-holding cylinders.

Hoses: All high pressure hoses are wire braid reinforced with a minimum safety factor of 4 to 1.

Oil Tank Capacity: 143 gallon mounted on top of front outriggers.

Hydraulic System: Operating pressure is 3,000 PSI. System is parallel closed center type and is equipped with liquid-filled pressure gauge. Oil is supplied to upper cylinders through hydraulic union in center of turret. Cable reel to provide 12 volt charging circuit to platform hydraulic control system.

Pump: Piston type, direct mount to truck PTO.

PTO: Heavy-duty, high-speed. Cable engaged from cab.

Cab Equipment: PTO cable or switch with indicator lights installed in truck cab. Master power switch on dashboard. U/L approved 5:BC dry chemical fire extinguisher installed in truck cab.

Operators Manual & Video: Two CDs and one printed copy of operation, maintenance, safety and parts manual provided with each unit. Operational and safety video provided at delivery.

Installation: Unit installed on truck, painted, system and tank filled with oil, tested, inspected, and ready to operate.

Standard Paint: Paint boom and turret red, outriggers red, and bed and boxes black. Top of steel bed painted with black nonskid surface.

Bumper: Bureau of Motor Carrier Safety rear bumper.

Weight: Approximately 30,000 lbs. with 16' steel-floor bed less truck.

Truck Chassis Required: Approx. 192" C.T. RBM 3,300,000 in-lb. per rail, 20,000 lb. front axle and 60,000 lb. GVWR required. Trucks must have increased cooling, heavy-duty front and rear springs, 12V electrical system with high capacity alternator, cab clearance stop/tail/backup lights, and I.D. lamps. Extended front frame rails. Recommended GVWR is minimum for HiReach with flatbed only. Contact factory when additional equipment is to be added.

Options:

14,000 lb Capacity Boom Winch.

Automatic Safety Rotation Lockout.

Winch Drum Tensioner.

Hydraulic Oil Cooler with Fan.

LED Lighting System.

Hydraulic Tool Circuit on Bed.

Boom Mounted Hose Reel.

Much More....

Elliott Equipment Company reserves the right to change the specification of any unit at any time without prior notice. This brochure is only a statement of general specifications on the date of this publication. For more detailed info on specific Elliott trucks go to www.elliottequip.com

ELLIOTT EQUIPMENT COMPANY

Elliott Equipment Company
3514 South 25th Street
Omaha, NE 68105

Phone: 402-592-4500
Fax: 402-592-4553
Email: sales@elliottequip.com

Built for You.
www.elliottequip.com

MAXIMUM WORKING RANGE

ELLIOTT EQUIPMENT COMPANY

MODEL L140 127-ft BOOM

RANGE DIAGRAM WITH FULL SPAN OUTRIGGERS

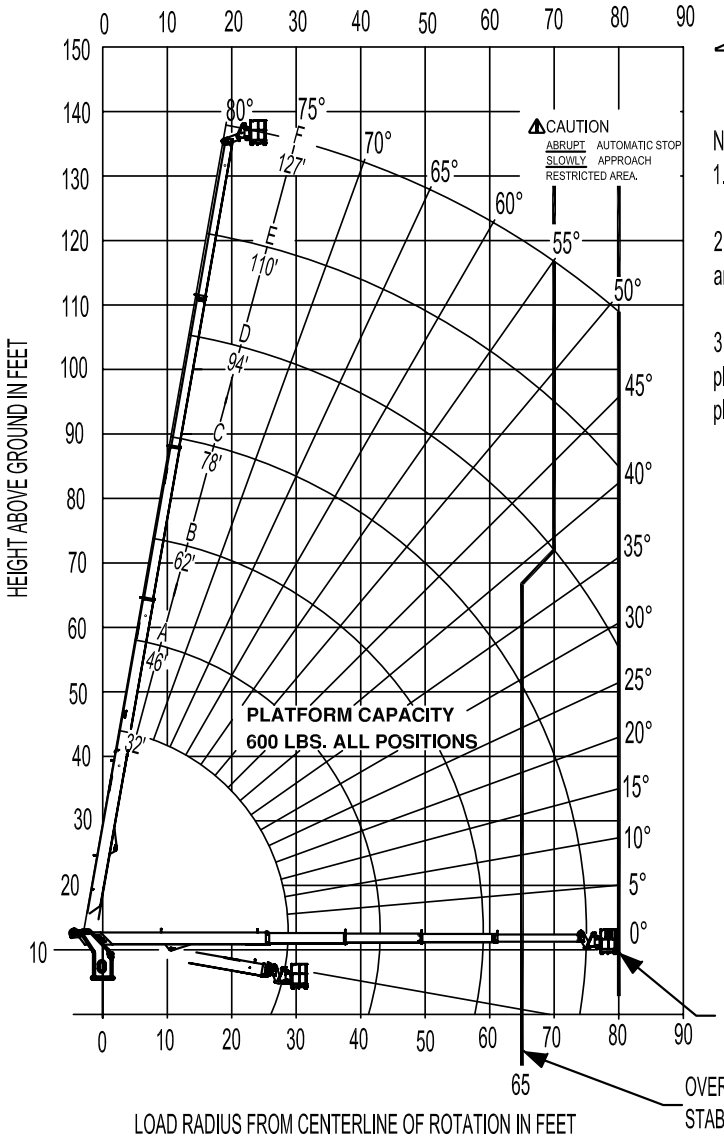

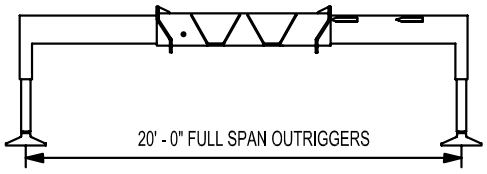

NOTE:

1. Personnel handling is allowed only with full span outriggers.

2. Boom load ratings are based on loaded boom radius. Loaded boom angles are given as reference only.

3. When handling personnel, radius is measured to the front rail of the platform. Reference loaded boom angles must be increased for platform offset.

AREA OF OPERATION:

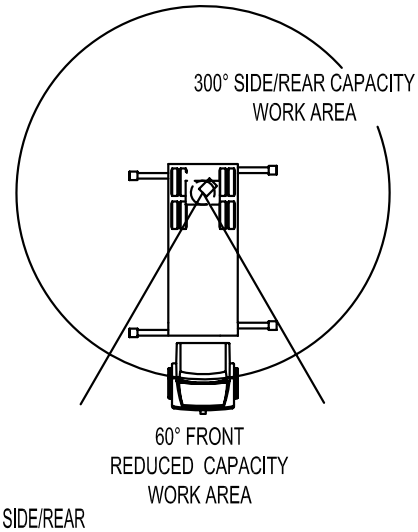

OVER SIDE/REAR STABILITY LIMIT (LMI MODE 0025)

OVER FRONT STABILITY LIMIT (LMI MODE 0125)

DO NOT PAINT OVER ANY LABELS 1172000 021011

LIFTING CAPABILITIES

ELLIOTT EQUIPMENT COMPANY

MODEL L140 360° CHART

127-ft BOOM

MAIN BOOM LOAD RATINGS WITH FULLY EXTENDED OUTRIGGERS (LMI MODE 0003)

MAIN BOOM LOAD RATINGS

LOAD RATINGS IN lbs WITH OUTRIGGERS AND STABILIZERS EXTENDED

LOAD RADIUS (FT)	BOOM ANGLE (deg °)	32-ft	BOOM ANGLE (deg °)	A 46-ft	BOOM ANGLE (deg °)	B 62-ft	BOOM ANGLE (deg °)	C 78-ft	BOOM ANGLE (deg °)	D 94-ft	BOOM ANGLE (deg °)	E 110-ft	BOOM ANGLE (deg °)	F 127-ft
6	78	14,000												
8	74	14,000												
10	70	14,000	78	14,000										
12	66	14,000	75	14,000										
14	62	14,000	72	14,000	78	14,000								
16	57	14,000	69	14,000	76	13,500								
18	53	12,000	66	12,900	74	13,000								
20	48	10,000	63	9,600	72	11,100	76	8,500						
25	32	7,000	55	7,000	67	8,100	72	6,900	76	6,300				
30			47	6,100	62	6,000	68	5,400	73	5,200	76	4,500	80	3,000
35			37	4,700	56	4,800	64	4,500	70	4,450	74	3,800	77	2,950
40			7	3,650	50	3,800	59	3,800	66	4,100	71	3,300	75	2,900
45					42	3,000	54	3,000	62	3,300	67	3,000	72	2,600
50					34	2,400	49	2,500	58	2,700	64	2,600	69	2,300
55					7	1,900	44	2,100	54	2,350	61	2,250	66	2,050
60							38	1,800	50	2,000	58	1,900	63	1,800
65							31	1,200	46	1,550	54	1,550	60	1,500
70							23	900	41	1,200	51	1,250	58	1,200
75									36	1,000	47	1,000	54	1,000
80									31	780	43	780	51	780
	0	5,000	0	3,400	0	1,400	0	780						

ELLIOTT EQUIPMENT CO. SUPPLIED LOADLINE EQUIPMENT DEDUCTIONS:
DOWNHAUL WEIGHT .....180 lbs
ONE SHEAVE BLOCK.....270 lbs

ADD 200 LBS. IF EZR PLATFORM IS NOT ATTACHED.

NOTICE

- DO NOT DEADHEAD LINE BLOCK AGAINST BOOM TIP WHEN EXTENDING BOOM
- KEEP AT LEAST 5 WRAPS OF LOADLINE ON THE WINCH DRUM AT ALL TIMES
- USE ONLY 1/2" DIAMETER WIRE ROPE, AS SPECIFIED BELOW, WITH THE PROPER BREAKING STRENGTHS LISTED
- ANTI-TWO-BLOCK SYSTEM MUST BE IN GOOD OPERATING CONDITION BEFORE OPERATING CRANE. SEE OPERATION & SAFETY MANUAL

1-PART LINE	2-PART LINE	
MAX PULL: 7,100 lbs	14,200 lbs	1/2" - 6 x 37 IWRC (3.5:1 S.F.) 26,600-lbs. BREAKING STRENGTH

AREA OF OPERATION:

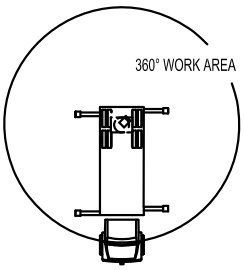

CRANE MEETS ASME B30.5 REQUIREMENTS AT TIME OF MANUFACTURE

DO NOT PAINT OVER ANY LABELS 1180140 03/02/12

Elliott Equipment Company
3514 South 25th Street
Omaha, NE 68105
Phone: 402-592-4500
Fax: 402-592-4553
Email: sales@elliottequip.com

CHASSIS DATA

	L140
Wheelbase (WB)	258" / 655 cm
Cab to Tandem (CT)	192" / 488 cm
Cab to End of Frame (EOF)	286" / 726 cm
Frame Section Modulus	27.5 in3 / 120,000 psi
Front Axle Gross Weight Rating	20,000 lb / 9072 kg
Rear Axle Gross Weight Rating	40,000 lb / 18 144 kg
Extended Front Frame	Required for Front Overhang

Chassis data is minimum general requirements-not for engineering.
Actual dimensions and truck data will depend on truck selection and axle configuration.

OPTIONS

Radio Remote Control
Interference protected radio remotes let you get closer to your work and have full control over your machine.

Boom-Mounted Winch
Take advantage of the 14,000 lb capacity 2 speed hydraulic winch with 1/2" cable and a load indication system.

Outrigger Pad Holders
Outrigger pad holders safely store your pads for travel and leave plenty of room for tool boxes.

Custom Paint
Choose from a wide list of high quality paint applications including Elliott's standard white or red paint, metallic paints, or multiple colors.

Outrigger Extensions
Our outrigger extensions give you extra clearance for work on hills and around guardrails.

Toolbox Configurations
Let us work with you to install a series of steel toolboxes above and below the bed to store tools and supplies.

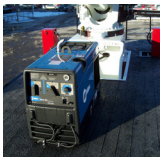

Bed Accessories
Mount a wide variety of accessories including welders, power washers, and generators on the bed.

Custom Rear Bumpers
Elliott's custom fabrication shop offers a wide range of specialized rear bumpers with integrated steps, toolboxes, and much more.

ELLIOTT EQUIPMENT COMPANY

Elliott Equipment Company
3514 South 25th Street
Omaha, NE 68105

Phone: 402-592-4500
Fax: 402-592-4553
Email: sales@elliottequip.com

Built for You.
www.elliottequip.com

E-Line™ E145

TECHNICAL SPECIFICATIONS

E145 SIDE VIEW DIAGRAM

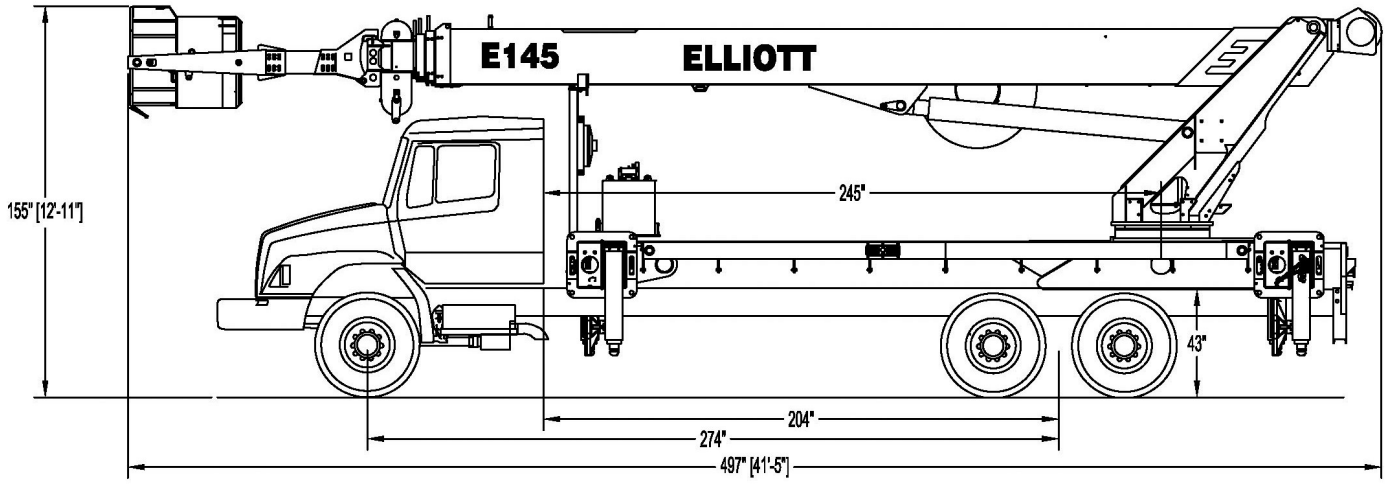

• **Maximum Working Height**	145'/44,2 m	• **Overall Height**	12'11"/3,9 m
• **Main Boom Length**	125'/38,1 m	• **Operator Controls**	Ride-Around Seated
• **Powered Boom Sections**	5	• **Outrigger Type Front**	Out-Down 'EZ-CRIB'
• **Working Area**	360 Degrees	• **Outrigger Spread Front**	21'2"/6,4 m
• **Lifting Capacity**	18,000 lbs/8165 kg	• **Outrigger Type Rear**	Out-Down 'EZ-CRIB'
• **Platform Capacity**	1,200 lbs/544 kg	• **Outrigger Spread Rear**	21'2"/6,4 m
• **Platform Size**	36"x72"/91x183 cm	• **Minimum Front Axle Rating**	18,000 lbs/8165 kg
• **Certification (ANSI)**	ANSI A92.2	• **Minimum Rear Axle Rating**	40,000 lbs/18 144 kg

ELLIOTT EQUIPMENT COMPANY

Elliott Equipment Company
3514 South 25th Street
Omaha, NE 68105

Phone: 402-592-4500
Fax: 402-592-4553
Email: sales@elliottequip.com

Built for You.
www.elliottequip.com

TECHNICAL SPECIFICATIONS

Maximum Platform Height: 145' with two-man platform attached.

Work Platform: 36x72" gravity-leveled and heavy-duty steel platform with lower platform grating, 40" high rails, integral grounding lugs, and external hand protection rail. Includes hydraulically assisted yoke for easy attachment to boom tip. Equipped with two safety lanyard attachment loops and two safety harnesses and 72" lanyards. Includes a compact hydraulic intensifier in platform.

Platform Tools: Hydraulic tool circuit with boom mounted hose reel from turret to boom and jib tip for hydraulic tools.

Winch: Mounted at the base of boom for a long fleet angle and flat level spooling of rope. Winch is driven by a planetary reducer and powered by a hydraulic motor. Burst-of-speed winch provides increased line speed. The winch brake is spring applied, pressure release design. Supplied with 400' of 9/16" diameter synthetic rope with a single line pull of 9,000 lbs, and a downhaul ball with swivel hook.

Platform Controls: Hard-wired remote controls with radio backup for intereference-protected proportional control over boom rotation, elevation, extension, and winch functions. Integral work envelope/LMI display provide operator with added safety.

Work Envelope/Load Moment Indicator (LMI) System: Electronic turret mounted computer. System senses hoist cylinder pressures, boom length, and boom angle with hydraulic function lockout. The display console is equipped with a graph showing crane utilization, boom angle or boom length, a mode select controls for main boom and jib operation, and an anti-two block with an audio/visual warning and shut-off functions to limit hook-boom point contact.

ERFSD Speed Reduction: Elliott exclusive feature uses LMI system to automatically slow down the speed of boom raise/lower/swing functions by 50% when the boom is telescoped near full extension.

Lower Controls: Elliott Ride-Around Control Console with seat, mounted on curbside of turret.

Outriggers: Two sets of 'EZ-crib' out-and-down outriggers with two-stage vertical stroke for longer penetration and less cribbing. Front and rear outriggers have a 21'2" span for excellent stability. Outriggers include removable ball socket aluminum pads that store on outrigger legs. Controls are located under each side of bed and at operator console. Outrigger interlocks prevent unit from being operated without outrigger deployment.

Frame: Full length, all welded rigid 4-plate design sub-frame. Sub-frame allows for bolt-on addition of aluminum bed wings, with top plate of subbase service as a portion of the bed deck, to form a three-piece bed.

Turret: Reverse offset turret is one-piece weldment. Turret rotates on large diameter ball bearing.

Rotation: Hydraulic motor drives turret through double reduction planetary swing drive for 360 degree continuous rotation.

Boom: 5-section fully proportional, high strength steel plated rectangular steel boom sections. Oversized smooth running wear pads and boom inspection/greasing holes for improved access. A maximum boom tip height of 137' mounted on a truck. Assembly includes heavy-duty cylinder fittings, pivot pins, and replaceable wear pads.

Boom Extension: Incorporates a 2-stage hydraulic extension cylinder, attached to the largest boom section, with a proportional cable extension system driving the outermost sections.

Lift: One double-acting long stroke cylinder provide smooth and stable boom elevation. Holding valve prevents boom from falling in event of hose failure.

Cylinders: All cylinders use microhoned cylinder tubing, chrome shafts, top grade packing and protective rod wipers. Cylinder-mounted holding valves provided on all load-holding cylinders.

Hoses: All high pressure hose is wire braid reinforced with a minimum safety factor of 4 to 1.

Oil Tank Capacity: 119 gallons mounted on top of frame.

Hydraulic System: Equipped with PTO, piston pump, SAE O-ring face seals on pressure lines, and a 10-micron return line filter. The control valve distributes all flow to hoist system, swing circuit, and other crane functions. System is closed-center type.

Cab Equipment: PTO with indicator lights installed in truck cab. U/L approved 5:BC dry chemical fire extinguisher installed in truck cab.

Operators Manual & Video: Two CD copies and one hard copy of operation, maintenance, safety and parts manual provided with each unit. Operational and safety video provided at delivery.

Installation: Unit installed on truck, painted, system and tank filled with oil, tested, inspected, certified and ready to operate.

Standard Paint: Painted white, outriggers red, and bed/subframe black.

Warranty: One Year Parts & Labor, Lifetime Structural Warranty.

Testing: Unit complies with ANSI A92.2-2009 for Vehicle-Mounted Elevating and Rotating Aerial Devices.

Elliott Equipment Company reserves the right to change the specification of any unit at any time without prior notice. This brochure is only a statement of general specifications on the date of this publication. For more detailed info on specific Elliott trucks go to www.elliottequip.com

ELLIOTT EQUIPMENT COMPANY

Elliott Equipment Company
3514 South 25th Street
Omaha, NE 68105

Phone: 402-592-4500
Fax: 402-592-4553
Email: sales@elliottequip.com

RANGE CHART - MAIN BOOM

ELLIOTT EQUIPMENT COMPANY

MODEL E145

RANGE DIAGRAM WITH FULLY EXTENDED OUTRIGGERS

LMI MODES: MODE 2 & 3

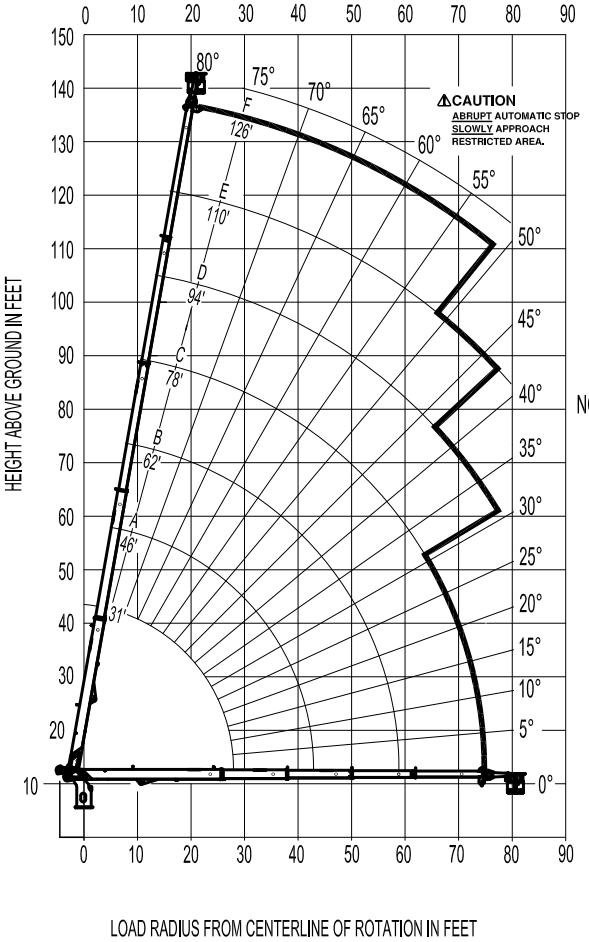

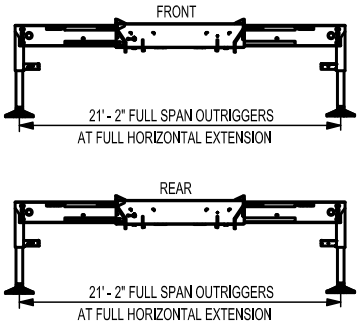

NOTE:

1. Boom load ratings are based on loaded boom radius. Loaded boom angles are given as reference only.
2. Personnel handling is allowed only with full span outriggers.
3. Radius is measured from center of rotation to load line.

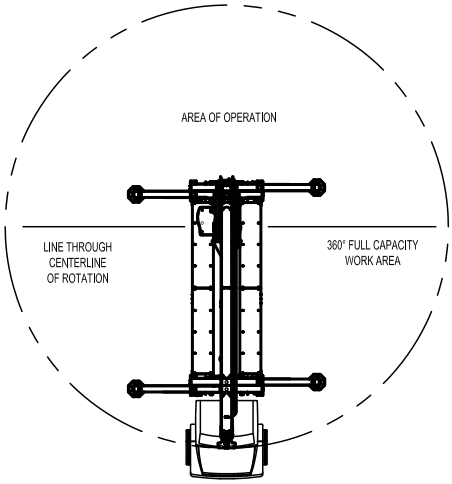

DO NOT PAINT OVER ANY LABELS 1200670 021015

Elliott Equipment Company
3514 South 25th Street
Omaha, NE 68105

Phone: 402-592-4500
Fax: 402-592-4553
Email: sales@elliottequip.com

RANGE CHART - MAIN BOOM WITH PLATFORM

ELLIOTT EQUIPMENT COMPANY

MODEL E145

BOOM RANGE DIAGRAM WITH PLATFORM ATTACHED

LMI MODE: MODE 1

PLATFORM CAPACITY 1200 LBS MAX

PLATFORM LOAD	MAXIMUM RADIUS
1200 LBS	70 FT
600 LBS	80 FT

USE OUTRIGGERS AT ALL TIMES

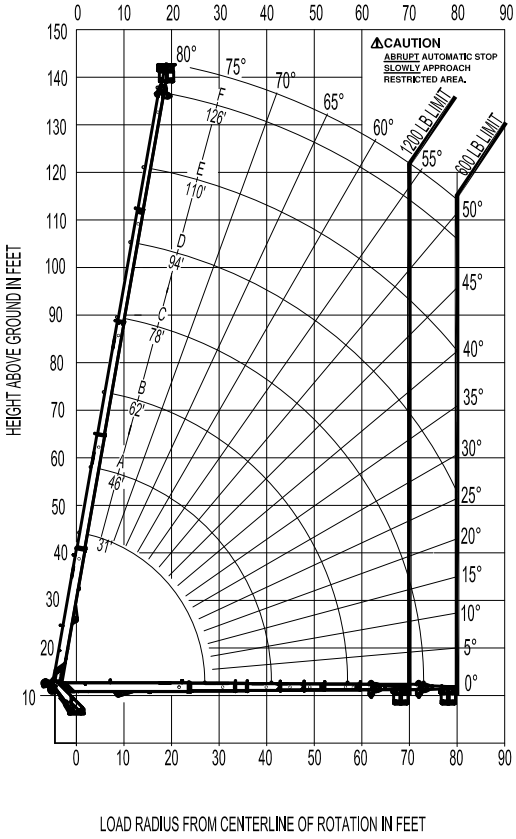

NOTE:
1. Personnel handling is allowed only with full span outriggers.
2. Boom load ratings are based on loaded boom radius. Loaded boom angles are given as reference only.
3. Radius is measure to the far platform railing.
4. Refer to manual for wind considerations.

DO NOT PAINT OVER ANY LABELS 1200670 021015

Elliott Equipment Company
3514 South 25th Street
Omaha, NE 68105
Phone: 402-592-4500
Fax: 402-592-4553
Email: sales@elliottequip.com

LOAD CHART - MAIN WINCH

ELLIOTT EQUIPMENT COMPANY

MODEL E145

MAIN BOOM LOAD RATINGS WITH FULLY EXTENDED OUTRIGGERS — LMI MODES: MODE 2 & 3

MAIN BOOM LOAD RATINGS WITH PLATFORM ATTACHED — LMI MODE: MODE 2

MAIN BOOM LOAD RATINGS WITH PLATFORM REMOVED — LMI MODE: MODE 3

LOAD RATINGS IN lbs WITH OUTRIGGERS AND STABILIZERS EXTENDED

LOAD RADIUS (FT)	BOOM ANGLE (deg °)	31-ft	BOOM ANGLE (deg °)	A 46-ft	BOOM ANGLE (deg °)	B 62-ft	BOOM ANGLE (deg °)	C 78-ft	BOOM ANGLE (deg °)	D 94-ft	BOOM ANGLE (deg °)	E 110-ft	BOOM ANGLE (deg °)	F 126-ft
6	79	18,000												
8	76	18,000												
10	72	17,800	80	14,000										
12	68	16,000	77	14,000										
14	64	15,000	74	14,000	80	14,000								
16	59	14,000	71	14,000	78	13,500								
18	55	12,000	68	12,900	76	13,000								
20	50	10,000	65	9,600	74	11,100	78	8,500						
25	34	7,000	57	7,000	69	8,100	74	6,900	78	6,300				
30			49	6,100	64	6,000	70	5,400	75	5,200	78	4,500	82	3,000
35			39	4,700	58	4,800	66	4,500	72	4,450	76	3,800	79	2,950
40			29	3,650	52	3,800	61	3,800	68	4,100	73	3,300	77	2,900
45					42	3,000	54	3,000	62	3,300	67	3,000	72	2,600
50					34	2,400	49	2,500	58	2,700	64	2,600	69	2,300
55					7	1,900	44	2,100	54	2,350	61	2,250	66	2,050
60							38	1,800	50	2,000	58	1,900	63	1,800
65							31	1,200	46	1,550	54	1,550	60	1,500
70							23	900	41	1,200	51	1,250	58	1,200
75									36	1,000	47	1,000	54	1,000
80									31	780	43	780	51	780
	0	5,000	0	3,400	0	1,400	0	780						
	600		600		600		600		600		600		600	ADDITIONAL CAPACITY WHEN PLATFORM IS DETACHED (lbs)

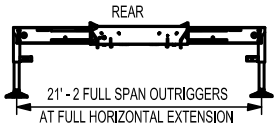

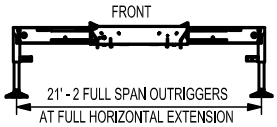

ELLIOTT EQUIPMENT CO. SUPPLIED LOADLINE EQUIPMENT DEDUCTIONS:

SEE WEIGHT TAG ON TACKLE AND DEDUCT APPROPRIATE WEIGHT FOR DOWNHAUL WEIGHT AND SHEAVE BLOCK.
RADIUS IS MEASURED FROM CENTERLINE OF ROTATION TO LOAD LINE.

DO NOT PAINT OVER ANY LABELS 1200670 021015

Elliott Equipment Company
3514 South 25th Street
Omaha, NE 68105
Phone: 402-592-4500
Fax: 402-592-4553
Email: sales@elliottequip.com

WINCH DATA

ELLIOTT EQUIPMENT COMPANY

MODEL E145

PARTS OF LINE

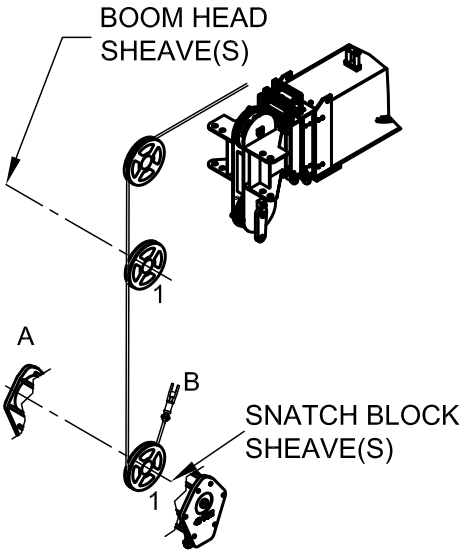

1-2 PARTS OF LINE

NOTICE:

- DO NOT DEADHEAD LINE BLOCK AGAINST BOOM TIP WHEN EXTENDING BOOM.
- KEEP AT LEAST 5 WRAPS OF LOADLINE ON THE WINCH DRUM AT ALL TIMES.
- USE ONLY 9/16" DIAMETER ROPE, AS SPECIFIED, WITH THE PROPER BREAKING STRENGTH LISTED.
- ANTI-TWO-BLOCK SYSTEM MUST BE IN GOOD OPERATING CONDITION BEFORE OPERATING CRANE. SEE OPERATION & SAFETY MANUAL.

PARTS OF LINE	SHEAVE(S) ON BOOM HEAD	SHEAVE(S) ON SNATCH BLOCK	9/16" - YALE ULTREX YELLOW ROPE 45,000-lbs. BREAKING STRENGTH
1	1	A	9,000 lbs
2	1 B	1	18,000 lbs

A-DEAD END FOR ODD PARTS OF LINE
B-DEAD END FOR EVEN PARTS OF LINE

DO NOT PAINT OVER ANY LABELS 1200670 021015

Elliott Equipment Company
3514 South 25th Street
Omaha, NE 68105
Phone: 402-592-4500
Fax: 402-592-4553
Email: sales@elliottequip.com

CHASSIS DATA

	E145 E-Line
Wheelbase (WB)	274" / 696 cm
Cab to Trunnion (CT)	204" / 518 cm
Afterframe (AF)	110" / 280 cm
Truck Frame RBM Minimum	3,300,000 in-lb
Front Axle Gross Weight Rating	18,000 lb / 8165 kg
Rear Axle Gross Weight Rating	40,000 lb / 18 144 kg
Gross Vehicle Weight (GVWR)	58,000 lb / 26 308 kg

Chassis data is minimum general requirements-not for engineering.
Actual dimensions and truck data will depend on truck selection and axle configuration.

OPTIONS

Fiberglass Platform Yoke
Fiberglass yoke for use with Elliott's two-man work platform.

Safety Lighting
A wide range of lighting solutions including strobes, work lights, and much more to boost safety and increase job site productivity.

Enclosed Steel Control Cab
Replaces the standard control station and include an sliding door, adjustable seat, heater, wipers, internal fan, audio system, option air conditioning and much more.

Outrigger Pads
Wooden or synthetic outrigger pads assist with spreading the load and improving stability on sensitive or soft job sites.

Bed-Mounted Accessories
Mount a wide variety of tool accessories including welders, power washers, and generators on the bed with reels and connections at ground level.

Work Area Definition System (WADS)
Elliott's LMI system includes the option to limit the work area via a 'virtual wall' to work around obstacles including power lines and obstructions.

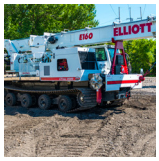

Track Vehicle Mounting Solutions
Available with installation on an off-road track vehicle carrier with rubber tracks and steel grousers for the most severe terrain applications.

Custom Tool Boxes
Steel and aluminum lockable tool boxes located beneath and above the bed for transporting essential equipment and job site tools.

ELLIOTT EQUIPMENT COMPANY

Elliott Equipment Company
3514 South 25th Street
Omaha, NE 68105

Phone: 402-592-4500
Fax: 402-592-4553
Email: sales@elliottequip.com

Built for You.
www.elliottequip.com

E-Line™ E160

TECHNICAL SPECIFICATIONS

E160 SIDE VIEW DIAGRAM

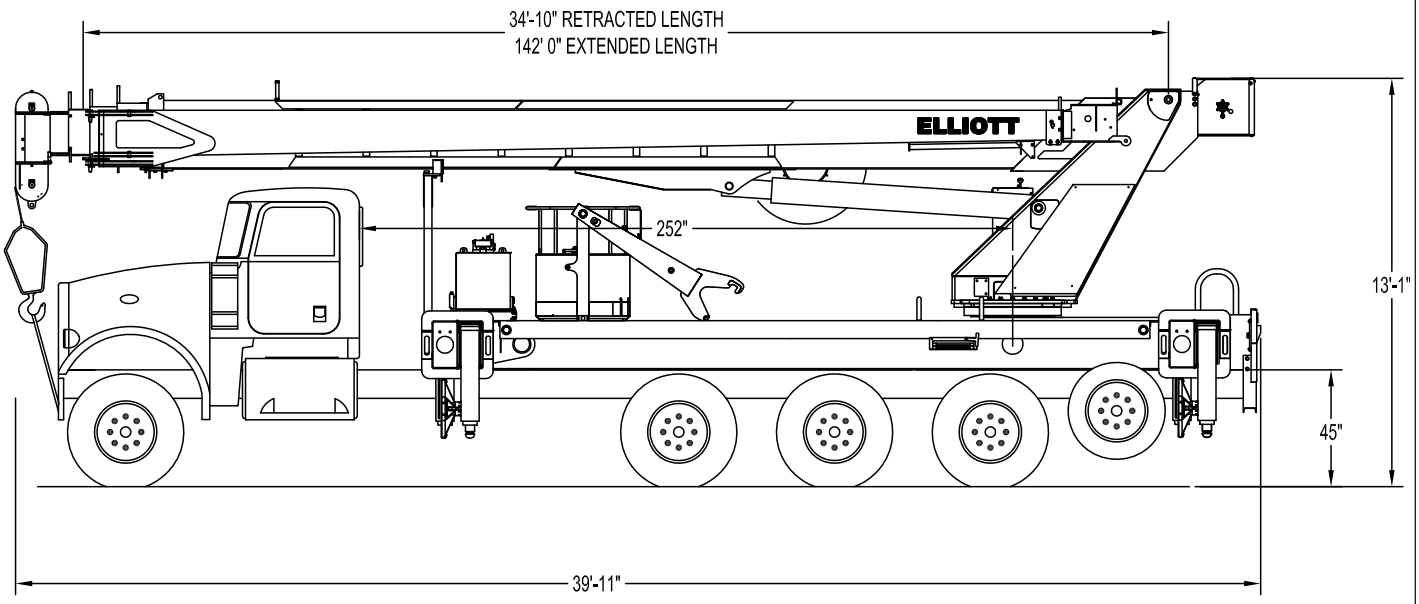

• **Maximum Working Height**	215'/65,5 m
• **Main Boom Length**	155'/47,2 m
• **Jib Lengths**	32'-55'/9,8-16,7 m
• **Working Area**	360 Degrees
• **Lifting Capacity**	30,000 lbs/13 608 kg
• **Platform Capacity**	1,200 lbs/544 kg
• **Platform Size**	36"x72"/91x183 cm
• **Certification (ANSI)**	ANSI A92.2

• **Boom Sections**	5
• **Overall Height**	13'1"/4 m
• **Operator Controls**	Ride-Around Seated
• **Outrigger Type Front**	Out-Down
• **Outrigger Spread Front**	21'2"/6,4 m
• **Outrigger Type Rear**	Out-Down
• **Outrigger Spread Rear**	26'2"/8 m
• **Minimum GVWR**	86,000 lbs / 39 000 kg

ELLIOTT EQUIPMENT COMPANY

Elliott Equipment Company
3514 South 25th Street
Omaha, NE 68105

Phone: 402-592-4500
Fax: 402-592-4553
Email: sales@elliottequip.com

Built for You.
www.elliottequip.com

TECHNICAL SPECIFICATIONS

Minimum Platform Height: 160' ground to platform floor.

Maximum Platform Height: 210' ground to platform floor with jib.

Work Platform: 36" x 72" gravity-leveled and heavy-duty steel platform with lower platform grating, 40" high rails, integral grounding lugs, and external hand protection rail. Includes hydraulically assisted yoke for easy attachment to boom or jib tip. Equipped with two safety lanyard attachment loops and two safety harnesses and 72" lanyards. Includes a compact hydraulic intensifier in platform.

Platform Tools: Hydraulic tool circuit with boom mounted hose reel from turret to boom and jib tip for hydraulic tools.

Winch: Mounted at the base of boom for a long fleet angle and flat level spooling of rope. Winch is driven by a planetary reducer and powered by a hydraulic motor. Burst-of-speed winch provides increased line speed. The winch brake is spring applied, pressure release design. Supplied with 425' of 5/8" diameter synthetic rope with a single line pull of 10,000 lbs, and a downhaul ball with swivel hook.

Platform Controls: Hard-wired remote controls with radio backup for intereference-protected proportional control over boom rotation, elevation, extension, and winch functions. Integral work envelope/LMI display provide operator with added safety.

Work Envelope/Load Moment Indicator (LMI) System: Electronic turret mounted computer. System senses hoist cylinder pressures, boom length, and boom angle with hydraulic function lockout. The display console is equipped with a graph showing crane utilization, boom angle or boom length, a mode select controls for main boom and jib operation, and an anti-two block with an audio/visual warning and shut-off functions to limit hook-boom point contact.

Lower Controls: Elliott Ride-Around Control Console with seat mounted on curbside of turret.

Outriggers: Two sets of 'EZ-crib' out-and-down outriggers with two-stage vertical stroke for longer penetration and less cribbing. Front outriggers have a 21'2" span, rear outriggers have a 26'2" span for excellent stability. Outriggers include removable ball socket aluminum pads that store on outrigger legs. Controls are located under each side of bed. Outrigger interlocks prevent unit from being operated without outrigger deployment.

Frame: Full length, all welded rigid 4-plate design sub-frame. Sub-frame allows for bolt-on addition of aluminum bed wings, with top plate of subbase service as a portion of the bed deck, to form a three-piece bed.

Turret: Reverse offset turret is one-piece weldment. Turret rotates on large diameter ball bearing.

Rotation: Hydraulic motor drives turret through double reduction planetary swing drive for 360 degree continuous rotation.

Boom: 5-section fully proportional, high strength steel plated rectangular steel boom sections. Oversized smooth running wear pads and boom inspection/greasing holes for improved access. A maximum boom tip height without jib of 160' mounted on a truck. Assembly includes heavy-duty cylinder fittings, pivot pins, and replaceable wear pads.

Boom Extension: Incorporates a 2-stage hydraulic extension cylinder, attached to the largest boom section, with a proportional cable extension system driving the outermost sections.

Lift: One double-acting long stroke cylinder provide smooth and stable boom elevation. Holding valve prevents boom from falling in event of hose failure.

Cylinders: All cylinders use microhoned cylinder tubing, chrome shafts, top grade packing and protective rod wipers. Cylinder-mounted holding valves provided on all load-holding cylinders.

Hoses: All high pressure hose is wire braid reinforced with a minimum safety factor of 4 to 1.

Oil Tank Capacity: 119 gallons mounted on top of frame.

Hydraulic System: Equipped with PTO, piston pump, SAE O-ring face seals on pressure lines, and a 10-micron return line filter. The control valve distributes all flow to hoist system, swing circuit, and other crane functions. System is closed-center type.

Cab Equipment: PTO with indicator lights installed in truck cab. U/L approved 5:BC dry chemical fire extinguisher installed in truck cab.

Operators Manual & Video: Two CD copies and one hard copy of operation, maintenance, safety and parts manual provided with each unit. Operational and safety video provided at delivery.

Standard Paint: Painted white, outriggers red, and bed/subframe black.

Warranty: One Year Parts & Labor, Lifetime Structural Warranty.

Testing: Unit complies with ANSI A92.2-2009 for Vehicle-Mounted Elevating and Rotating Aerial Devices.

Elliott Equipment Company reserves the right to change the specification of any unit at any time without prior notice. This brochure is only a statement of general specifications on the date of this publication. For more detailed info on specific Elliott trucks go to www.elliottequip.com

ELLIOTT EQUIPMENT COMPANY

Elliott Equipment Company
3514 South 25th Street
Omaha, NE 68105

Phone: 402-592-4500
Fax: 402-592-4553
Email: sales@elliottequip.com

RANGE CHART - MAIN BOOM WITH PLATFORM

ELLIOTT EQUIPMENT COMPANY

MODEL E160

MAIN BOOM RANGE DIAGRAM WITH PLATFORM ATTACHED

LMI MODE: PLTF MAINBM

PLATFORM LOAD	MAXIMUM RADIUS
1200 LBS	80 FT
600 LBS	90 FT

MAXIMUM PLATFORM CAPACITY RATINGS:
1200 LBS
2 PERSONS

USE OUTRIGGERS AT ALL TIMES

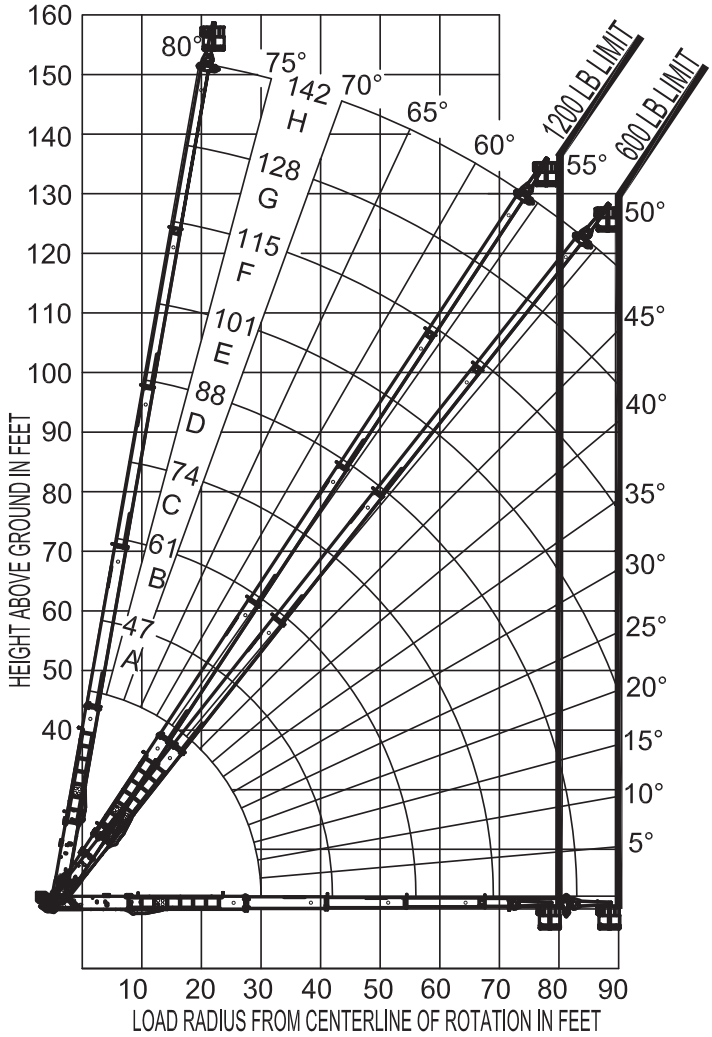

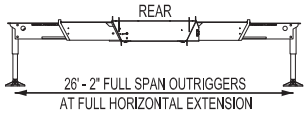

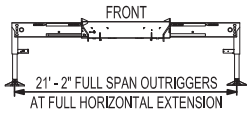

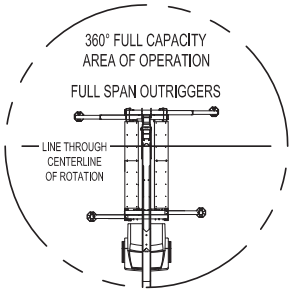

NOTES:
1. Personnel handling is allowed only with full span outriggers.
2. Loaded boom angles are given as reference only.
3. Boom deflection is not illustrated. Increase boom angle if necessary to maintain load radius. Do not exceed the maximum load radius.
4. Radius is measured to the center of the platform.
5. Refer to manual for wind ratings.

1201120 042315

Elliott Equipment Company
3514 South 25th Street
Omaha, NE 68105
Phone: 402-592-4500
Fax: 402-592-4553
Email: sales@elliottequip.com

RANGE CHART - RETRACTED JIB WITH PLATFORM

ELLIOTT EQUIPMENT COMPANY

MODEL E160

2 PIECE FULLY RETRACTED JIB RANGE DIAGRAM WITH PLATFORM ATTACHED — LMI MODE: PLTF JIBRET

PLATFORM LOAD: 600 LBS AND BELOW — MAXIMUM BOOM EXTENSION: 142 FT - H

PLATFORM LOAD: 600 LBS - 1200 LBS — MAXIMUM BOOM EXTENSION: 132 FT - J

PLATFORM LOAD	MAXIMUM BOOM EXTENSION	MAXIMUM ELEVATED RADIUS
1200 LBS	132 FT - J	70 FT
600 LBS	142 FT - H	74 FT

MAXIMUM PLATFORM CAPACITY RATINGS:
1200 LBS 2 PERSONS

USE OUTRIGGERS AT ALL TIMES

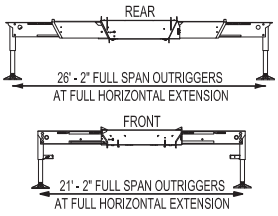

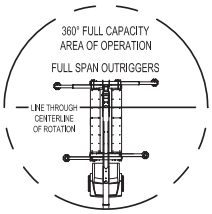

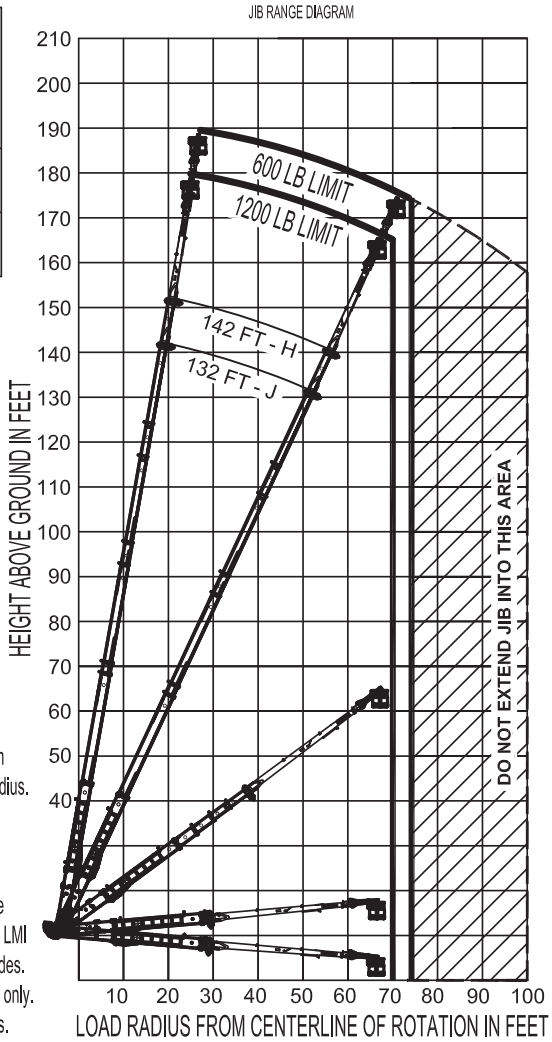

NOTES:

1. Operate jib and platform by radius when main boom is extended. Increase boom angle if necessary to maintain load radius. Do not exceed the maximum load radius.
2. When the main boom is retracted, operate jib and platform by boom angles. Do not exceed any rated jib and platform capacities at reduced boom lengths.
3. Personnel handling is allowed only with full span outriggers.
4. When handling personnel, actual load radius is measured to the far railing of the platform. Actual load radius can be up to 7 ft beyond the radius indicated by the LMI due to the platform offset. The LMI indicates radius to the load line for all jib modes.
5. Boom deflection is not illustrated. Loaded boom angles are shown for reference only.
6. Main boom extension is limited to 132 ft when the platform load exceeds 600 lbs.
7. Refer to manual for wind ratings.

1201120 042315

Elliott Equipment Company
3514 South 25th Street
Omaha, NE 68105
Phone: 402-592-4500
Fax: 402-592-4553
Email: sales@elliottequip.com

RANGE CHART - FULLY EXTENDED JIB WITH PLATFORM

ELLIOTT EQUIPMENT COMPANY

MODEL E160

2 PIECE FULLY EXTENDED JIB RANGE DIAGRAM WITH PLATFORM ATTACHED — LMI MODE: PLTF JIBEXT

PLATFORM LOAD: 600 LBS AND BELOW — MAXIMUM BOOM EXTENSION: 142 FT - H

PLATFORM LOAD: 600 LBS - 1200 LBS — MAXIMUM BOOM EXTENSION: 132 FT - J

PLATFORM LOAD	MAXIMUM BOOM EXTENSION	MAXIMUM ELEVATED RADIUS
1200 LBS	132 FT - J	78 FT
600 LBS	142 FT - H	82 FT

MAXIMUM PLATFORM CAPACITY RATINGS:
1200 LBS 2 PERSONS

USE OUTRIGGERS AT ALL TIMES

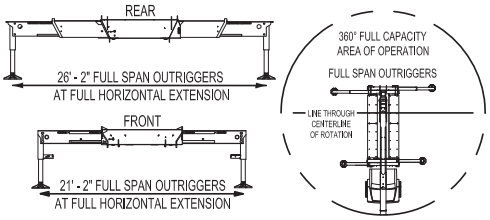

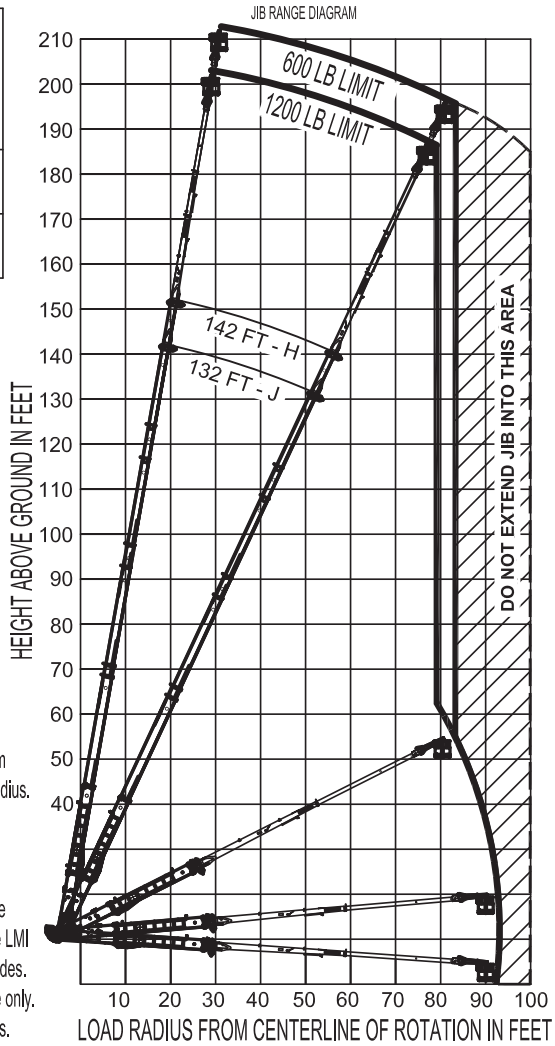

NOTES:

1. Operate jib and platform by radius when main boom is extended. Increase boom angle if necessary to maintain load radius. Do not exceed the maximum load radius.
2. When the main boom is retracted, operate jib and platform by boom angles. Do not exceed any rated jib and platform capacities at reduced boom lengths.
3. Personnel handling is allowed only with full span outriggers.
4. When handling personnel, actual load radius is measured to the far railing of the platform. Actual load radius can be up to 7 ft beyond the radius indicated by the LMI due to the platform offset. The LMI indicates radius to the load line for all jib modes.
5. Boom deflection is not illustrated. Loaded boom angles are shown for reference only.
6. Main boom extension is limited to 132 ft when the platform load exceeds 600 lbs.
7. Refer to manual for wind ratings.

1201120 042315

Elliott Equipment Company
3514 South 25th Street
Omaha, NE 68105
Phone: 402-592-4500
Fax: 402-592-4553
Email: sales@elliottequip.com

LOAD CHART - MAIN BOOM

ELLIOTT EQUIPMENT COMPANY

MODEL E160

MAIN BOOM LOAD RATINGS WITH FULLY EXTENDED OUTRIGGERS

LMI MODES: HOOK W/PLTF & NONE

LOAD RATINGS IN LBS WITH OUTRIGGERS FULLY EXTENDED

LOAD RADIUS IN FEET	LOADED BOOM ANGLE	34-ft	LOADED BOOM ANGLE	A 47-ft	LOADED BOOM ANGLE	B 61-ft	LOADED BOOM ANGLE	C 74-ft	LOADED BOOM ANGLE	D 88-ft	LOADED BOOM ANGLE	E 101-ft	LOADED BOOM ANGLE	F 115-ft	LOADED BOOM ANGLE	G 128-ft	LOADED BOOM ANGLE	H 142-ft
7	71.5	30,000																
8	69.2	30,000																
10	67.0	30,000	72.8	26,200														
12	63.2	30,000	70.4	26,200	75.3	26,200												
15	57.4	30,000	66.5	26,200	72.4	25,900	75.7	22,200										
20	45.9	27,500	59.4	25,700	67.4	20,700	71.8	19,200	74.8	14,900								
25	31.7	19,000	51.3	19,200	62.2	20,000	67.5	17,400	71.3	12,500	73.9	10,300						
30			42.6	14,300	56.3	17,850	63.1	14,750	67.7	10,900	71.1	9,400	73.6	7,700	75.5	6,500		
35			31.6	11,000	49.7	11,200	58.5	11,400	64.0	10,500	68.0	8,400	71.0	6,800	73.1	5,700	75.3	3,500
40			14.5	8,600	42.8	8,800	53.5	9,040	60.2	9,000	64.7	8,000	68.2	6,000	71.0	5,000	73.1	3,500
45					34.7	7,100	48.0	7,300	56.3	7,350	61.4	7,400	65.8	5,200	68.6	4,400	70.9	3,500
50					24.1	5,700	42.0	5,800	51.9	5,900	58.0	6,000	62.9	5,100	66.1	4,000	68.7	3,000
55							35.2	4,750	47.4	4,850	54.7	4,900	60.0	4,800	63.5	3,400	66.5	2,700
60							27.8	3,850	42.8	3,900	50.8	4,000	56.9	4,000	60.8	3,300	64.2	2,400
65							16.3	3,050	37.3	3,100	46.8	3,250	53.6	3,200	58.1	3,200	61.7	2,300
70									30.8	2,450	42.3	2,550	50.3	2,500	55.3	2,500	59.4	2,200
75									22.7	1,850	37.4	1,950	49.8	1,950	52.3	2,000	56.9	2,100
80									6.4	1,300	31.8	1,400	42.6	1,450	49.2	1,450	54.2	1,550
85											25.1	950	38.2	1,050	45.8	1,150	51.6	1,150
90											15.9	600	33.4	700	42.1	780	48.7	780
95															38.2	450	45.7	450
	0	14,000	0	7,800	0	4,700	0	2,350	0	900								
DEDUCTIONS FOR STOWED EXT. JIB		950		700		550		450		400		350		300		250		200

LMI MODE: HOOK W/PLTF
MAIN BOOM LIFTING WITH PLATFORM ATTACHED
USE BOOM LOAD RATINGS LISTED IN TABLE

LMI MODE: NONE
MAIN BOOM LIFTING WITH PLATFORM DETACHED

ADDITIONAL CAPACITY WITH PLATFORM DETACHED	600 LBS ACROSS ENTIRE LOAD CHART

NOTES:
1. Boom load ratings are based on loaded boom radius. Loaded boom angles are given as reference only. Increase boom angle if necessary to maintain load radius. Do not exceed maximum load radius.
2. Boom deflection is not illustrated.
3. Personnel handling and jib use are allowed only with full span outriggers.
3. Refer to manual for wind ratings.
4. Deductions must be made from rated loads for any loadline equipment or boom attachments such as hooks, load blocks, and stowed jibs. Weights of load handling devices such as slings and shackles shall be considered part of the load.

RANGE DIAGRAM WITH FULL SPAN OUTRIGGERS

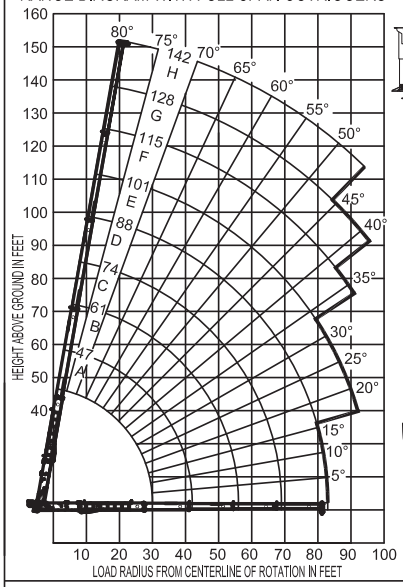

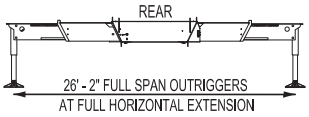

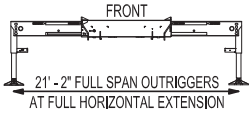

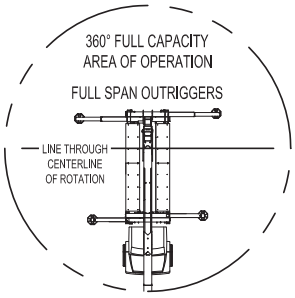

ELLIOTT EQUIPMENT COMPANY SUPPLIED LOADLINE EQUIPMENT DEDUCTIONS:

OVERHAUL BALL.....109 LBS
ELLIOTT ONE SHEAVE BLOCK.....120 LBS

PARTS OF LINE

NOTICE:
- DO NOT DEADHEAD LINE BLOCK AGAINST BOOM TIP WHEN EXTENDING BOOM.
- KEEP AT LEAST 5 WRAPS OF LOADLINE ON THE WINCH DRUM AT ALL TIMES.
- USE ONLY 5/8" DIAMETER ROPE, AS SPECIFIED, WITH THE PROPER BREAKING STRENGTH LISTED.
- ANTI-TWO-BLOCK SYSTEM MUST BE IN GOOD OPERATING CONDITION BEFORE OPERATING CRANE. SEE OPERATION & SAFETY MANUAL.

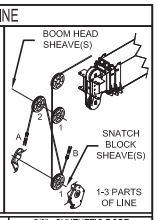

PARTS OF LINE	SHEAVE(S) ON BOOM HEAD	SHEAVE(S) ON SNATCH BLOCK	5/8" - SYNTHETIC ROPE 50,000-lbs. BREAKING STRENGTH
1	1	A	10,000 lbs
2	1 B	1	20,000 lbs
3	1 2	1 A	30,000 lbs

1201120 042315

LOAD AND RANGE CHART - TELESCOPIC JIB

ELLIOTT EQUIPMENT COMPANY

MODEL E160

JIB RANGE DIAGRAM WITH FULLY EXTENDED OUTRIGGERS — LMI MODES: 32' JIBRET & 55' JIBEXT

32' - 55' TWO SECTION JIB

32' RETRACTED JIB - LMI MODE: 32' JIBRET

55' EXTENDED JIB - LMI MODE: 55' JIBEXT

LMI MODE: 32' JIBRET		
LOAD RADIUS (FT)	LOADED BOOM ANGLE	LOAD RATING (LBS)
33	80	1,400
50	75	1,400
65	70	450

LMI MODE: 55' JIBEXT		
LOAD RADIUS (FT)	LOADED BOOM ANGLE	LOAD RATING (LBS)
40	80	900
59	75	900
76	70	300

JIB RANGE DIAGRAM

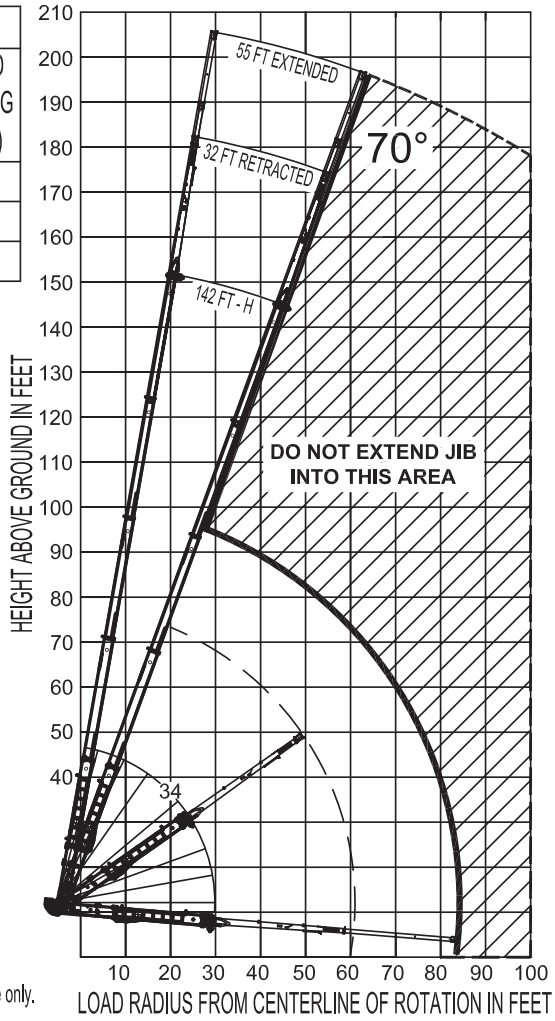

USE OUTRIGGERS AT ALL TIMES

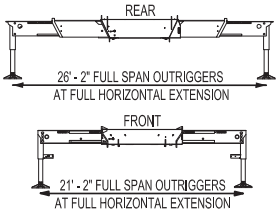

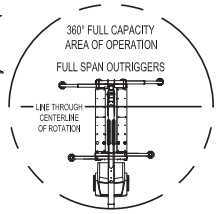

NOTES:

1. Operate jib by radius when main boom is extended. Increase boom angle if necessary to maintain load radius. Do not exceed the maximum load radius.
2. When the main boom is retracted, operate jib by boom angles. Do not exceed any rated jib capacities at reduced boom lengths.
3. Material handling with the jib is allowed only with full span outriggers.
4. Material handling with the jib is allowed only at boom angles above 70°.
5. Boom deflection is not illustrated. Loaded boom angles are shown for reference only.
6. Refer to manual for wind ratings.

1201120 042315

Elliott Equipment Company
3514 South 25th Street
Omaha, NE 68105
Phone: 402-592-4500
Fax: 402-592-4553
Email: sales@elliottequip.com

CHASSIS DATA

	E160 E-Line
Wheelbase (WB)	274" / 696 cm
Cab to Trunnion (CT)	204" / 518 cm
Afterframe (AF)	110" / 280 cm
Truck Frame RBM Minimum	3,300,000
Front Axle Gross Weight Rating	20,000 lb / 9072 kg
Rear Axle Gross Weight Rating	66,000 lb / 29 937 kg
Gross Vehicle Weight (GVWR)	86,000 lb / 39 000 kg

Chassis data is minimum general requirements-not for engineering.
Actual dimensions and truck data will depend on truck selection and axle configuration.

OPTIONS

Isolating Platform Yoke
Fiberglass yoke for use with Elliott's two-man work platform. Provides electrical isolation between platform and ground. (Not Insulated)

Safety Lighting
A wide range of lighting solutions including strobes, work lights, and much more to boost safety and increase job site productivity.

Enclosed Steel Control Cab
Replaces the standard control station and include an sliding door, adjustable seat, heater, wipers, internal fan, audio system, option air conditioning and much more.

Outrigger Pads
Wooden or synthetic outrigger pads assist with spreading the load and improving stability on sensitive or soft job sites.

Bed-Mounted Accessories
Mount a wide variety of tool accessories including welders, power washers, and generators on the bed with reels and connections at ground level.

Work Area Definition System (WADS)
Elliott's LMI system includes the option to limit the work area via a 'virtual wall' to work around obstacles including power lines and obstructions.

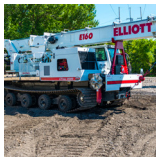

Track Vehicle Mounting Solutions
Available with installation on an off-road track vehicle carrier with rubber tracks and steel grousers for the most severe terrain applications.

Custom Tool Boxes
Steel and aluminum lockable tool boxes located beneath and above the bed for transporting essential equipment and job site tools.

ELLIOTT EQUIPMENT COMPANY

Elliott Equipment Company
3514 South 25th Street
Omaha, NE 68105

Phone: 402-592-4500
Fax: 402-592-4553
Email: sales@elliottequip.com

E-Line™ E190

TECHNICAL SPECIFICATIONS

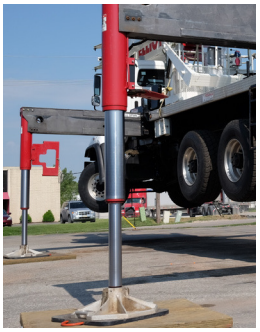

E190 SIDE VIEW DIAGRAM

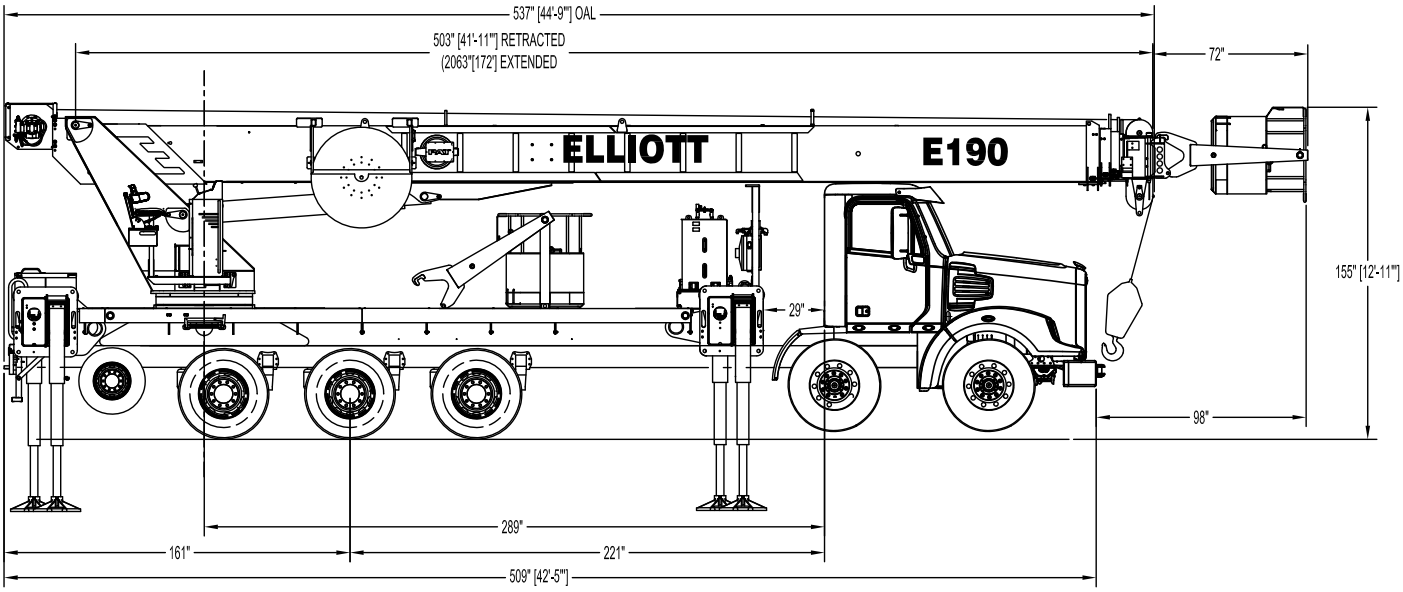

• **Working Height Without Jib**	190'/58 m
• **Working Height With Isolating Jib**	202'/62 m
• **Main Boom Length**	170'/52 m
• **Working Area**	360 Degrees
• **Lifting Capacity**	30,000 lbs/13 608 kg
• **Platform Capacity**	1,200 lbs/544 kg
• **Platform Size**	36"x72"/91x183 cm
• **Certification (ANSI)**	ANSI A92.2

• **Overall Height**	12'11"/3,9 m
• **Operator Controls**	Ride-Around Seated
• **Outrigger Type Front**	Out-Down 'EZ-CRIB'
• **Outrigger Spread Front**	26'2"/8 m
• **Outrigger Type Rear**	Out-Down 'EZ-CRIB'
• **Outrigger Spread Rear**	26'2"/8 m
• **Minimum Front Axle Rating**	40,000 lbs/18 144 kg
• **Minimum GVWR**	108,000 lbs/48 988 kg

ELLIOTT EQUIPMENT COMPANY

Elliott Equipment Company
3514 South 25th Street
Omaha, NE 68105

Phone: 402-592-4500
Fax: 402-592-4553
Email: sales@elliottequip.com

Built for You.
www.elliottequip.com

TECHNICAL SPECIFICATIONS

Maximum Working Height: 190' Without Jib and 202' With Isolating Jib. Height Includes Work Platform.

Work Platform: 36x72" gravity-leveled and heavy-duty steel platform with lower platform grating, 40" high rails, integral grounding lugs, and external hand protection rail. Includes hydraulically assisted yoke for easy attachment to boom tip. Equipped with two safety lanyard attachment loops and two safety harnesses and 72" lanyards. Includes a compact hydraulic intensifier in platform.

Platform Tools: Hydraulic tool circuit with boom mounted hose reel from turret to boom and jib tip for hydraulic tools.

Winch: Mounted at the base of boom for a long fleet angle and flat level spooling of rope. Winch is driven by a planetary reducer and powered by a hydraulic motor. Burst-of-speed winch provides increased line speed. The winch brake is spring applied, pressure release design. Supplied with 425' of 5/8" diameter synthetic rope with a single line pull of 9,000 lbs, and a downhaul ball with swivel hook.

Platform Controls: Hard-wired remote controls with radio backup for intereference-protected proportional control over boom rotation, elevation, extension, and winch functions. Integral work envelope/LMI display provide operator with added safety.

Work Envelope/Load Moment Indicator (LMI) System: Electronic turret mounted computer. System senses hoist cylinder pressures, boom length, and boom angle with hydraulic function lockout. The display console is equipped with a graph showing crane utilization, boom angle or boom length, a mode select controls for main boom and jib operation, and an anti-two block with an audio/visual warning and shut-off functions to limit hook-boom point contact.

ERFSD Speed Reduction: Elliott exclusive feature uses LMI system to automatically slow down the speed of boom raise/lower/swing functions by 50% when the boom is telescoped near full extension.

Lower Controls: Elliott Ride-Around Control Console with seat, mounted on curbside of turret.

Outriggers: Two sets of 'EZ-crib' out-and-down outriggers with two-stage vertical stroke for longer penetration and less cribbing. Front and rear outriggers have a 26'2" span for excellent stability. Outriggers include removable ball socket aluminum pads that store on outrigger legs. Controls are located under each side of bed and at operator console. Outrigger interlocks prevent unit from being operated without outrigger deployment.

Frame: Full length, all welded rigid 4-plate design sub-frame. Sub-frame allows for bolt-on addition of aluminum bed wings, with top plate of subbase service as a portion of the bed deck, to form a three-piece bed.

Turret: Reverse offset turret is one-piece weldment. Turret rotates on large diameter ball bearing.

Rotation: Hydraulic motor drives turret through double reduction planetary swing drive for 360 degree continuous rotation.

Boom: 5-section fully proportional, high strength steel plated rectangular steel boom sections. Oversized smooth-running wear pads and boom inspection/greasing holes for improved access. A maximum boom tip height of 181' mounted on a truck. Assembly includes heavy-duty cylinder fittings, pivot pins, and replaceable wear pads.

Boom Extension: Incorporates a 2-stage hydraulic extension cylinder, attached to the largest boom section, with a proportional cable extension system driving the outermost sections.

Lift: One double-acting long stroke cylinder provide smooth and stable boom elevation. Holding valve prevents boom from falling in event of hose failure.

Cylinders: All cylinders use microhoned cylinder tubing, chrome shafts, top grade packing and protective rod wipers. Cylinder-mounted holding valves provided on all load-holding cylinders.

Hoses: All high pressure hose is wire braid reinforced with a minimum safety factor of 4 to 1.

Oil Tank Capacity: 188 gallons mounted on top of frame.

Hydraulic System: Equipped with PTO, piston pump, SAE O-ring face seals on pressure lines, and a 10-micron return line filter. The control valve distributes all flow to hoist system, swing circuit, and other crane functions. System is closed-center type.

Cab Equipment: PTO with indicator lights installed in truck cab. U/L approved 5:BC dry chemical fire extinguisher installed in truck cab.

Operators Manual & Video: Two CD copies and one hard copy of operation, maintenance, safety and parts manual provided with each unit. Operational and safety video provided at delivery.

Installation: Unit installed on truck, painted, system and tank filled with oil, tested, inspected, certified and ready to operate.

Standard Paint: Painted white, outriggers red, and bed/subframe black.

Warranty: One Year Parts & Labor, Lifetime Structural Warranty.

Testing: Unit complies with ANSI A92.2-2009 for Vehicle-Mounted Elevating and Rotating Aerial Devices.

Elliott Equipment Company reserves the right to change the specification of any unit at any time without prior notice. This brochure is only a statement of general specifications on the date of this publication. For more detailed info on specific Elliott trucks go to www.elliottequip.com

ELLIOTT EQUIPMENT COMPANY

Elliott Equipment Company
3514 South 25th Street
Omaha, NE 68105

Phone: 402-592-4500
Fax: 402-592-4553
Email: sales@elliottequip.com

RANGE CHART - MAIN BOOM

ELLIOTT EQUIPMENT COMPANY

MODEL E190

RANGE DIAGRAM WITH FULLY EXTENDED OUTRIGGERS

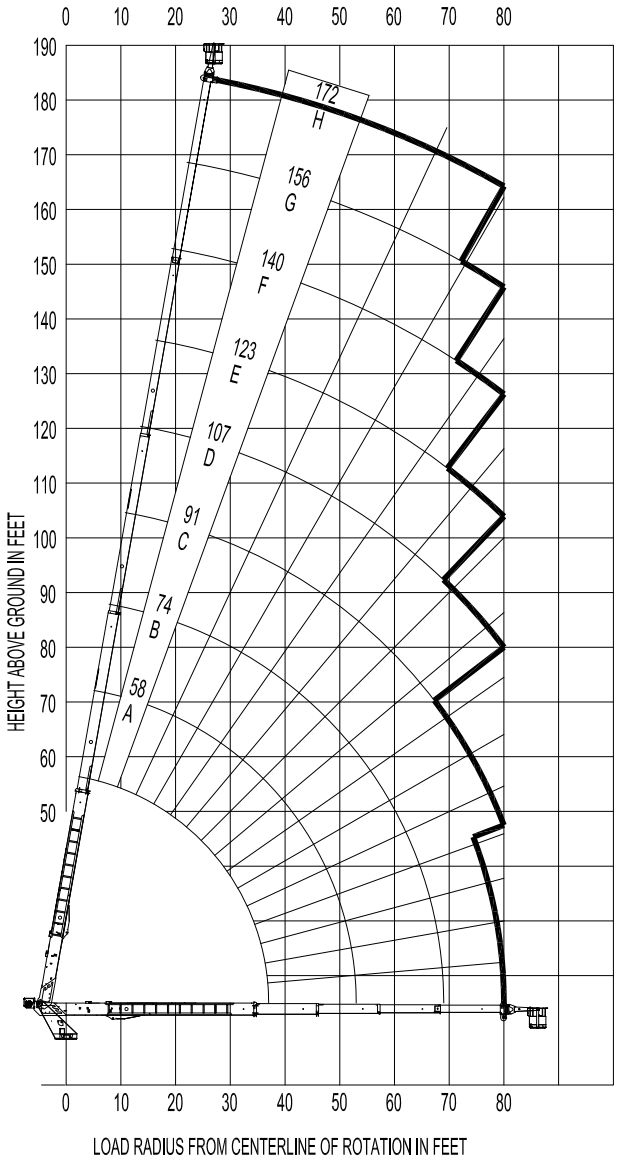

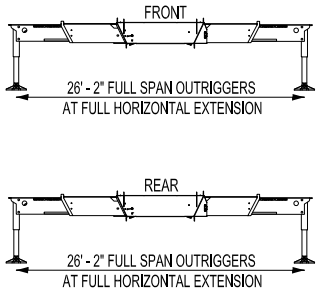

NOTE:

1. Boom load ratings are based on loaded boom radius. Loaded boom angles are given as reference only.
2. Personnel handling is allowed only with full span outriggers.
3. Radius is measured from center of rotation to load line.

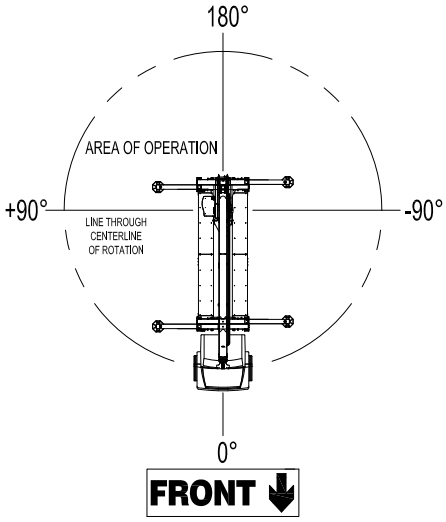

DO NOT PAINT OVER ANY LABELS 1205760 032116

RANGE CHART - MAIN BOOM WITH PLATFORM

ELLIOTT EQUIPMENT COMPANY

MODEL E190

BOOM RANGE DIAGRAM WITH PLATFORM ATTACHED TO MAIN BOOM

PLATFORM CAPACITY 1200 LBS MAX

PLATFORM LOAD	MAXIMUM RADIUS
1200 LBS	80 FT
600 LBS	90 FT

USE OUTRIGGERS AT ALL TIMES

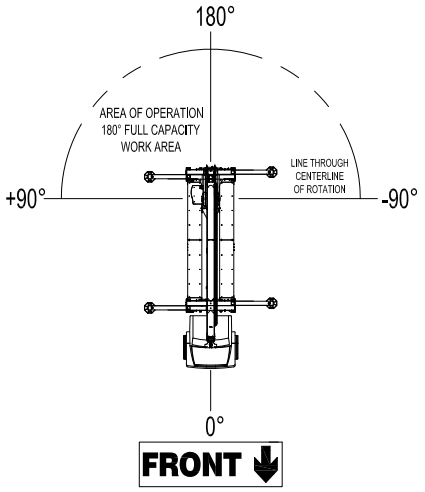

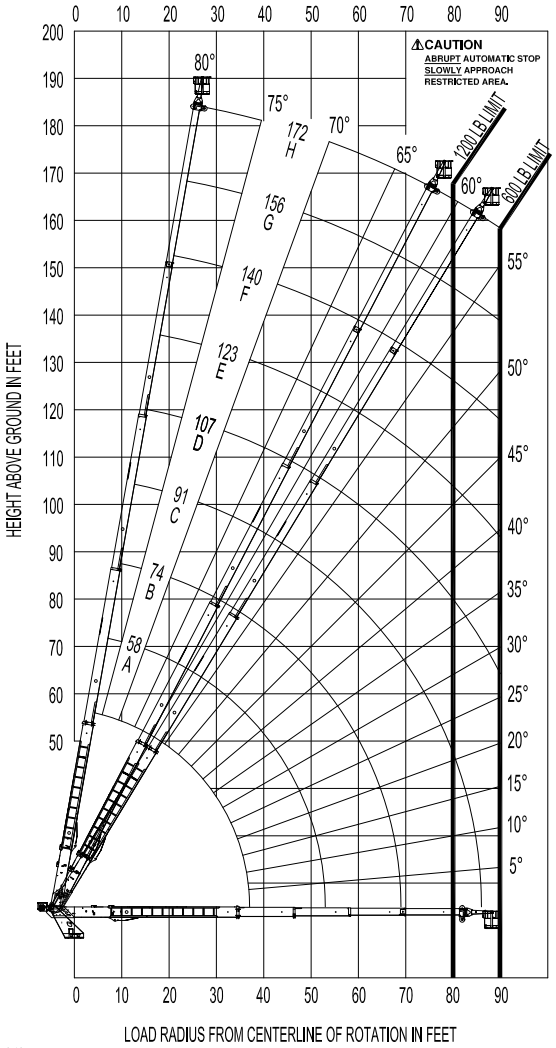

NOTE:
1. Personnel handling is allowed only with full span outriggers.
2. Boom load ratings are based on loaded boom radius. Loaded boom angles are given as reference only.
3. Radius is measured to the far platform railing.
4. Refer to manual for wind considerations.

DO NOT PAINT OVER ANY LABELS 1205760 032116

Elliott Equipment Company
3514 South 25th Street
Omaha, NE 68105
Phone: 402-592-4500
Fax: 402-592-4553
Email: sales@elliottequip.com

RANGE CHART - MAIN BOOM WITH PLATFORM AND JIB

ELLIOTT EQUIPMENT COMPANY

MODEL E190

BOOM RANGE DIAGRAM WITH PLATFORM ATTACHED TO JIB

PLATFORM CAPACITY 1200 LBS MAX

PLATFORM LOAD	MAXIMUM RADIUS
1200 LBS	80 FT

USE OUTRIGGERS AT ALL TIMES

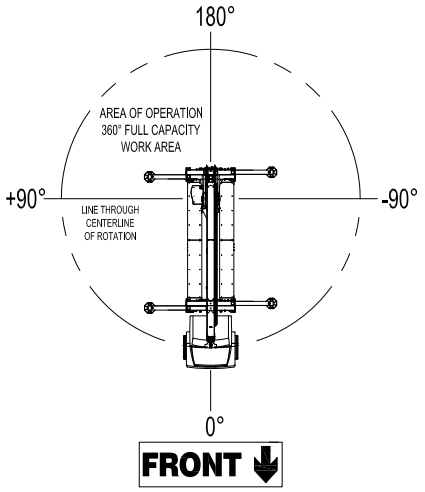

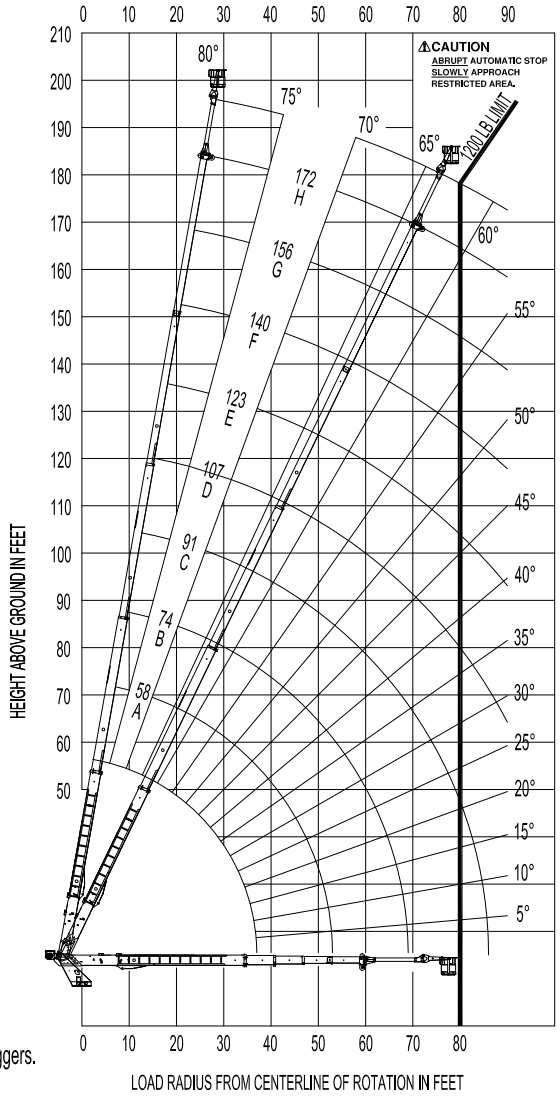

NOTE:
1. Personnel handling is allowed only with full span outriggers.
2. Boom load ratings are based on loaded boom radius. Loaded boom angles are given as reference only.
3. Radius is measured to the far platform railing.
4. Refer to manual for wind considerations.

DO NOT PAINT OVER ANY LABELS 1205760 032116

Elliott Equipment Company
3514 South 25th Street
Omaha, NE 68105
Phone: 402-592-4500
Fax: 402-592-4553
Email: sales@elliottequip.com
Built for You.
www.elliottequip.com

RANGE CHART - MAIN BOOM WITH PLATFORM AND JIB 2

ELLIOTT EQUIPMENT COMPANY

MODEL E190

BOOM RANGE DIAGRAM WITH PLATFORM ATTACHED TO JIB

PLATFORM CAPACITY 1200 LBS MAX

PLATFORM LOAD	MAXIMUM RADIUS
1200 LBS	80 FT
600 LBS	90 FT

USE OUTRIGGERS AT ALL TIMES

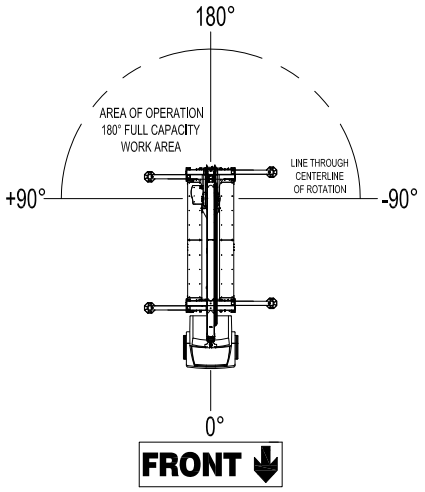

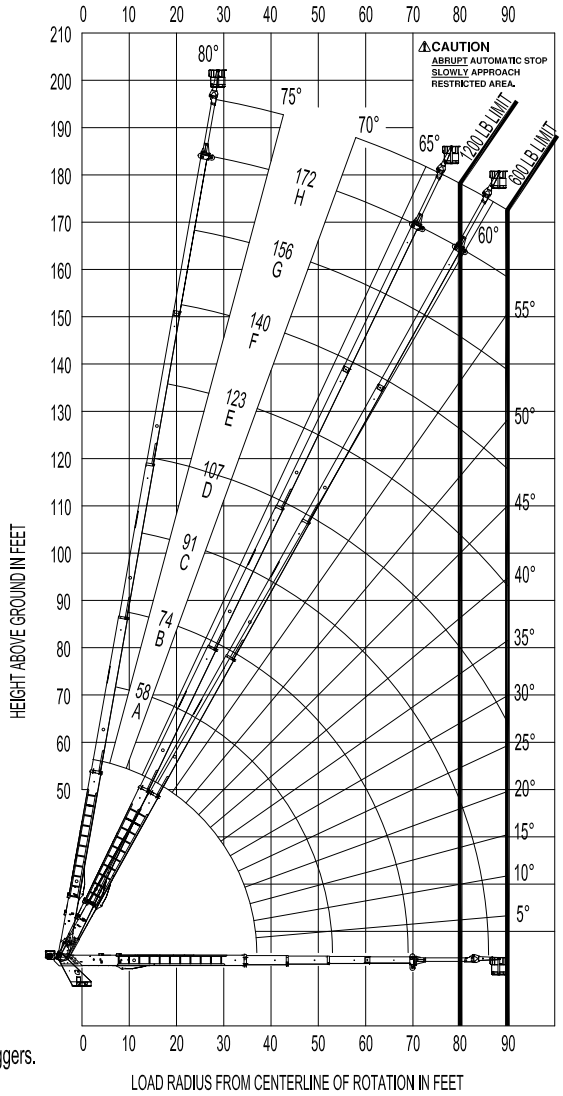

NOTE:
1. Personnel handling is allowed only with full span outriggers.
2. Boom load ratings are based on loaded boom radius. Loaded boom angles are given as reference only.
3. Radius is measured to the far platform railing.
4. Refer to manual for wind considerations.

DO NOT PAINT OVER ANY LABELS 1205760 032116

Elliott Equipment Company
3514 South 25th Street
Omaha, NE 68105
Phone: 402-592-4500
Fax: 402-592-4553
Email: sales@elliottequip.com
Built for You.
www.elliottequip.com

LOAD CHART - MAIN BOOM

ELLIOTT EQUIPMENT COMPANY

MODEL E190

MAIN BOOM LOAD RATINGS WITH FULLY EXTENDED OUTRIGGERS

PLATFORM ATTACHED TO MAIN BOOM OR PLATFORM REMOVED AND JIB DEPLOYED

LOAD RATINGS IN lbs WITH OUTRIGGERS AND STABILIZERS EXTENDED

LOAD RADIUS (FT)	BOOM ANGLE (deg °)	42-ft	BOOM ANGLE (deg °)	A 58-ft	BOOM ANGLE (deg °)	B 74-ft	BOOM ANGLE (deg °)	C 91-ft	BOOM ANGLE (deg °)	D 107-ft	BOOM ANGLE (deg °)	E 123-ft	BOOM ANGLE (deg °)	F 140-ft	BOOM ANGLE (deg °)	G 156-ft	BOOM ANGLE (deg °)	H 172-ft
6	77.5	30,000																
8	75.0	30,000																
10	72.6	30,000	78.7	28,400														
15	65.7	27,300	73.6	24,600	77.6	21,900	79.1	18,600										
20	57.7	21,100	68.3	20,300	73.6	19,600	76.2	16,400	79.4	13,400								
25	48.6	16,100	62.9	15,400	69.5	14,800	73.2	14,200	77.0	11,400	78.4	9,900	80.0	6,400	81.1	5,400		
30	37.7	12,400	57.2	12,000	65.2	11,700	70.1	11,400	74.1	8,400	76.0	6,700	78.0	4,400	79.3	4,300		
35	22.7	9,400	50.9	8,900	60.7	8,500	66.7	8,100	71.0	6,200	73.8	4,300	76.0	4,300	77.8	4,300	79.6	4,200
40			44.0	5,800	56.1	5,300	63.1	4,750	68.3	4,200	71.5	4,200	73.9	4,200	76.1	4,200	77.9	4,100
45			35.9	5,800	51.1	5,250	59.4	4,600	65.4	4,100	69.2	4,100	71.9	4,100	74.4	4,100	76.5	4,050
50			25.5	5,100	45.8	4,750	55.5	4,300	62.4	4,000	66.7	4,000	69.9	4,000	72.6	4,000	74.9	3,900
55					39.9	4,300	51.6	4,100	59.4	3,900	64.0	3,900	67.8	3,900	70.9	3,900	73.3	3,750
60					33.0	4,200	47.5	4,000	56.2	3,850	61.3	3,850	65.6	3,850	69.0	3,850	71.7	3,600
65					24.5	3,600	43.2	3,500	52.7	3,550	58.1	3,500	63.4	3,500	67.2	3,450	70.1	3,450
70							38.2	2,500	49.1	2,500	55.6	2,500	61.1	2,500	65.1	2,500	68.4	2,500
75							32.6	2,150	45.2	2,150	53.0	2,150	58.6	2,150	63.1	2,150	66.6	1,550
80							25.7	600	41.0	600	49.7	600	56.1	600	60.9	600	64.6	600
	0	8,700	0	5,000	0	2,900												
	600		600		600		600		600		600		600		ADDITIONAL CAPACITY WHEN PLATFORM IS DETACHED (lbs) - JIB STOWED OR REMOVED			
	1,500		1,500		1,500		1,500		1,500		1,500		1,500		DEDUCT FROM CAPACITY WHEN PLATFORM ATTACHED TO DEPLOYED JIB			

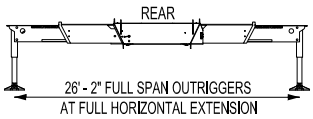

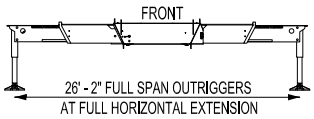

ELLIOTT EQUIPMENT CO. SUPPLIED LOADLINE EQUIPMENT DEDUCTIONS:

SEE WEIGHT TAG ON TACKLE AND DEDUCT APPROPRIATE WEIGHT FOR DOWNHAUL WEIGHT AND SHEAVE BLOCK.

RADIUS IS MEASURED FROM CENTERLINE OF ROTATION TO LOAD LINE.

DO NOT PAINT OVER ANY LABELS 1205760 032116

Elliott Equipment Company
3514 South 25th Street
Omaha, NE 68105

Phone: 402-592-4500
Fax: 402-592-4553
Email: sales@elliottequip.com

WINCH DATA

ELLIOTT EQUIPMENT COMPANY

MODEL E190

PARTS OF LINE

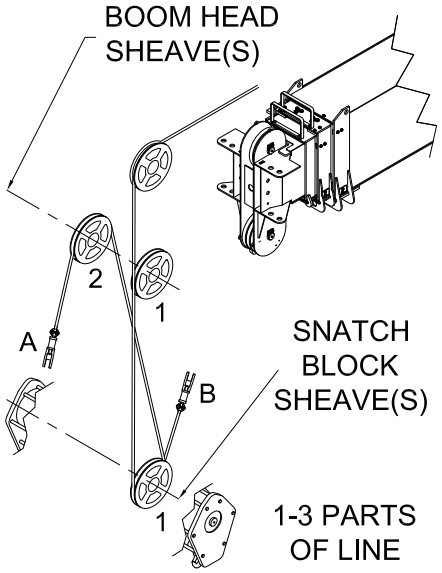

NOTICE:

- DO NOT DEADHEAD LINE BLOCK AGAINST BOOM TIP WHEN EXTENDING BOOM.
- KEEP AT LEAST 5 WRAPS OF LOADLINE ON THE WINCH DRUM AT ALL TIMES.
- USE ONLY 9/16" DIAMETER ROPE, AS SPECIFIED, WITH THE PROPER BREAKING STRENGTH LISTED.
- ANTI-TWO-BLOCK SYSTEM MUST BE IN GOOD OPERATING CONDITION BEFORE LIFTING MATERIAL. SEE OPERATION & SAFETY MANUAL.

PARTS OF LINE	SHEAVE(S) ON BOOM HEAD	SHEAVE(S) ON SNATCH BLOCK	5/8" - SYNTHETIC ROPE 50,000-lbs. BREAKING STRENGTH
1	1	A	10,000 lbs
2	1 B	1	20,000 lbs
3	12	1A	30,000 lbs

A-DEAD END FOR ODD PARTS OF LINE
B-DEAD END FOR EVEN PARTS OF LINE

DO NOT PAINT OVER ANY LABELS 1205760 032116

Elliott Equipment Company
3514 South 25th Street
Omaha, NE 68105
Phone: 402-592-4500
Fax: 402-592-4553
Email: sales@elliottequip.com

CHASSIS DATA

	E190 E-Line
Wheelbase (WB)	297" / 754 cm
Cab to Trunnion (CT)	224" / 569 cm
Afterframe (AF)	120" / 305 cm
Truck Frame RBM Minimum	3,300,000 in-lb
Front Axle Gross Weight Rating	40,000 lb / 18 144 kg
Rear Axle Gross Weight Rating	68,000 lb / 30 844 kg
Gross Vehicle Weight (GVWR)	108,000 lb / 48 988 kg

Chassis data is minimum general requirements-not for engineering.
Actual dimensions and truck data will depend on truck selection and axle configuration.

OPTIONS

Fiberglass Platform Extension
Fiberglass boom tip extension for use with Elliott's two-man work platform.

Safety Lighting
A wide range of lighting solutions including strobes, work lights, and much more to boost safety and increase job site productivity.

Enclosed Steel Control Cab
Replaces the standard control station and include an sliding door, adjustable seat, heater, wipers, internal fan, audio system, option air conditioning and much more.

Outrigger Pads
Wooden or synthetic outrigger pads assist with spreading the load and improving stability on sensitive or soft job sites.

Bed-Mounted Accessories
Mount a wide variety of tool accessories including welders, power washers, and generators on the bed with reels and connections at ground level.

Work Area Definition System (WADS)
Elliott's LMI system includes the option to limit the work area via a 'virtual wall' to work around obstacles including power lines and obstructions.

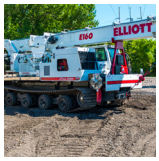

Track Vehicle Mounting Solutions
Available with installation on an off-road track vehicle carrier with rubber tracks and steel grousers for the most severe terrain applications.

Custom Tool Boxes
Steel and aluminum lockable tool boxes located beneath and above the bed for transporting essential equipment and job site tools.

ELLIOTT EQUIPMENT COMPANY

Elliott Equipment Company
3514 South 25th Street
Omaha, NE 68105

Phone: 402-592-4500
Fax: 402-592-4553
Email: sales@elliottequip.com

Built for You.
www.elliottequip.com